APPENDIX D

SOURCE DETERMINATION STUDY WORK PLAN

1.0 Introduction

This work plan supports achievement of the objectives of the Remedial Investigation (RI) Addendum by conducting stable isotope and geochemical tracer analysis on select groundwater samples to determine the extent of dissolved perchlorate originating from the Jet Propulsion Laboratory (JPL). Sample collection will occur in March/April 2005. This work plan identifies procedures for collecting additional analytes.

2.0 Background

Stable isotope analyses were recommended by the United States Environmental Protection Agency (U.S. EPA) and the City of Pasadena's consultant, Geosyntec, based on their review of the Draft RI Addendum Work Plan. The National Aeronautics and Space Administration (NASA) then organized an expert team to evaluate the existing data and make recommendations for isotope analyses. Meetings were then conducted with members of the expert team on October 25, 2004 and November 2, 2004. The expert team consisted of the following members:

October 25, 2004 Meeting

- Dr. Bruce Sass (Battelle)
- Dr. Neil Sturchio (University of Illinois at Chicago)

November 2, 2004 Meeting

- Dr. Max Coleman (California Institute of Technology)
- Dr. Richard Hurst (Hurst and Associates)
- Mr. Michael Land (United States Geological Survey [USGS])
- Mr. Eric Reichard (USGS).

Dr. Sturchio and Dr. Hurst prepared technical memoranda to summarize recommendations made during the meetings. These memoranda are provided as Attachments 1 and 2 of this Work Plan. Recommendations from the expert team include the following isotope analyses:

- Perchlorate: chlorine ($\delta^{37}Cl$) and oxygen ($\delta^{18}O$, $\delta^{17}O$ and $\Delta^{17}O$)
- Groundwater: oxygen ($\delta^{18}O$), hydrogen ($\delta^{2}H$), and inorganic chloride ($\delta^{37}Cl$)
- Strontium ($^{87}Sr/^{86}Sr$), and
- Tritium/helium ($^{3}H/^{3}He$).

Other recommended sampling included chlorofluorocarbons (CFCs), sulfur hexafluoride (SF_6), analysis for perchlorate-reducing microbial activity, dissolved oxygen (DO), specific electrical conductance, oxidation-reduction potential (ORP), dissolved nitrogen, total kjeldahl nitrogen, ammonia, nitrite/nitrate, ferrous/ferric iron, sulfite/sulfate, dissolved organic carbon (DOC), dissolved inorganic carbon (DIC), and total organic carbon (TOC).

While CFCs and SF_6 analyses provide a useful complement to $^{3}H/^{3}He$ measurements to determine the age of groundwater, CFC and SF_6 sample analysis is not included as part of this work plan. CFC and SF_6 sample collection requires the use of refrigerator-grade copper tubing to create a closed path between the well pump to the sample collection bottles. Any exposure of the sample to outside air can affect the CFC/SF_6 concentration in the sample, compromising the results. Given the specialized construction of the multiport Westbay monitoring wells at the site, the small diameter (1.5 inches) of the

multiport wells, and the depth of the static water levels in the monitoring wells, it was determined that it is not technically feasible to collect CFC and SF_6 samples.

A microcosm study previously performed at the JPL site demonstrated that indigenous bacteria are capable of reducing perchlorate and identified the microbes cultured from the JPL site as *Dechlorosoma suillum* strain JPLRND (Hatzinger et al., 2002). The activity of these perchlorate-reducing bacteria will be assessed by conducting either a chlorite-dismutase-specific immunoprobe or a functional gene probe for the relevant perchlorate-reducing RNA. The additional geochemical analyses to be performed as part of this study will also be used to evaluate if appropriate conditions are present within the aquifer to support biodegradation of the perchlorate.

3.0 Sampling Locations

The production wells and monitoring wells which have been selected as sample locations for this study are provided in Table D-1. A map showing the well locations is provided in Figure D-1. The selected sampling locations provide representation of the groundwater conditions both on and off the JPL facility:

- MW 1: a shallow monitoring well located east of the JPL facility was chosen as an upgradient location representative of runoff from the San Gabriel Mountains.
- MW 24: a multiport well located within the JPL source area.
- MWs 17 and 18: multiport wells located outside the JPL facility and within the known perchlorate plume where other chemicals of interest from the JPL site have been detected (including carbon tetrachloride and trichloroethene).
- MWs 19, 20, and 21: multiport wells located south and southeast of the JPL facility representing the southernmost monitoring wells. Modeling indicates that groundwater from upgradient portions of the Monk Hill Subbasin flows to the south of the JPL facility; therefore, samples collected from these wells improve the understanding of groundwater origin and mixing.
- MW 25: a new multiport well located near the Sunset Reservoir wells.

Several municipal production wells are located in the vicinity of the JPL facility and are of interest to this study. Municipal production wells owned by the City of Pasadena, Lincoln Avenue Water Company (LAWC), Rubio Canyon Land and Water Association (RCLWA), and Las Flores Water Company (LFWC) are located hydraulically downgradient (or cross gradient) of JPL, and municipal production wells operated by Valley Water Company (VWC) are located hydraulically upgradient of JPL. Two City-of-Pasadena production wells (Bangham and Garfield) and two VWC production wells (VWC-2 and VWC-3) are constructed to serve as extraction and injection wells. Injected water was purchased from the Metropolitan Water District (MWD). A significant portion of the injected MWD water was obtained from the Colorado River, which contains low levels of perchlorate from industrial sources in Nevada. Therefore, samples will be collected from the following locations (if possible):

- VWC-1: located upgradient of JPL.
- LAWC-3: located downgradient of the JPL facility; perchlorate and volatile organic compounds (VOCs) in LAWC-3 are believed to originate from JPL. NASA funded installation, and operation of treatment has been installed as part of a CERCLA Removal Action for perchlorate and other chemicals of interest (including carbon tetrachloride and low levels of tetrachloroethene) associated with the JPL.

Table D-1. Monitoring and Production Wells Summary Table

Well	Screen Number	Perchlorate Detected in Screen	Depth of Screened Interval (ft bgs)	Elevation of Screened Interval (ft amsl)	Layer	Water Type (1)	Range Perchlorate Detected (µg/L)(2)
MW-1	1	No	70-110	1007-1047	1	1	—
MW-17	1	No	246-256	935-945	1	1	—
	2	Yes	366-376	815-825	2	1	3.4 – 17.0
	3	Yes	466-476	715-725	3	1	4.0 – 209.0
	4	Yes	578-588	603-613	4	1+2	6.5 – 17.0
	5	Yes	723-733	458-468	4	1+2	4.4 – 22.0
MW-18	1	No	266-276	950-959	1	1	—
	2	No	326-336	890-899	1	1	—
	3	Yes	421-431	794-804	2	1	1.3-6.4
	4	Yes	561-571	654-664	3	1+2	8.1-31.3
	5	No	681-691	534-544	4	2	—
MW-19	1	No	240-250	893-903	1	1	—
	2	Yes	310-320	823-833	2	3+1	4.3 – 8.0
	3	Yes	390-400	743-753	2	3+1	3.3 – 9.7
	4	Yes	442-452	691-701	3	1+3	3.5-4.9
	5	Yes	492-502	641-651	3	3+1	4.2 – 4.4
MW-20	1	Yes	228-238	927-937	1	3+1	4.4 – 7.8
	2	No	388-398	767-777	2	2	—
	3	No	558-568	597-607	3	2; 2+1	—
	4	Yes	698-708	457-467	4	2	20 – 124.0
	5	Yes	898-908	257-267	4	2	8.2
MW-21	1	Yes	86-96	963-973	1	3+1	3.1 – 19
	2	Yes	156-166	893-903	2	3	2.1 – 4.6
	3	Yes	236-246	813-823	2	3	2.7 – 4.9
	4	Yes	306-316	743-753	3	1+3	2.1 – 7.7
	5	Yes	366-376	683-693	3	3+1	2.6 – 6.2
MW-24	1	Yes	275-285	916-926	2	1+3	14.0 – 4,880.0
	2	Yes	370-380	821-831	2	2+3	11.6 - 700.0
	3	Yes	430-440	761-771	2	2	1.6
	4	No	550-560	641-651	3	2+1; 2	—
	5	No	657-685	516-526	4	2	—
MW-25(3, 4)	1	Yes	355-365	550-560			8.1-81.0
	2	Yes	420-430	485-495			12.0-56.0
	3	Yes	500-510	405-415			8.7-49.0
	4	Yes	630-640	275-285			8.1-77.0
	5	Yes	710-720	195-205			32.0
VWC-1	1	Yes	155-432	730-1007	2	3	4.2-6.4
LAWC-3	1	Yes	463-601	602-740	2,3	1	2.5-35.0
RCLWA-4	1	Yes	160-170; 195-325; 335-347	991-981; 956-826; 816-804	1,2,3	1	4.3 - 6.0
LFWC-2	1	Yes	240-390; 474-510	765-915; 645-681	2,3	1; 1+3	4.1-8.8
Garfield	1	Yes	192-257; 295-327; 355-360; 387-419; 602-620; 624-629	706-641; 603-571; 543-538; 511-479; 296-278; 274-269	3,4	3	3.0-27.7

(1) 1 = calcium bicarbonate; 2 = sodium bicarbonate; 3 = calcium-bicarbonate/chloride/sulfate.
(2) Analytical results span sampling events from Aug 1996 to Dec 2004.
(3) Analytical data based on preliminary sampling results.
(4) Well depths and elevations approximate pending survey data.

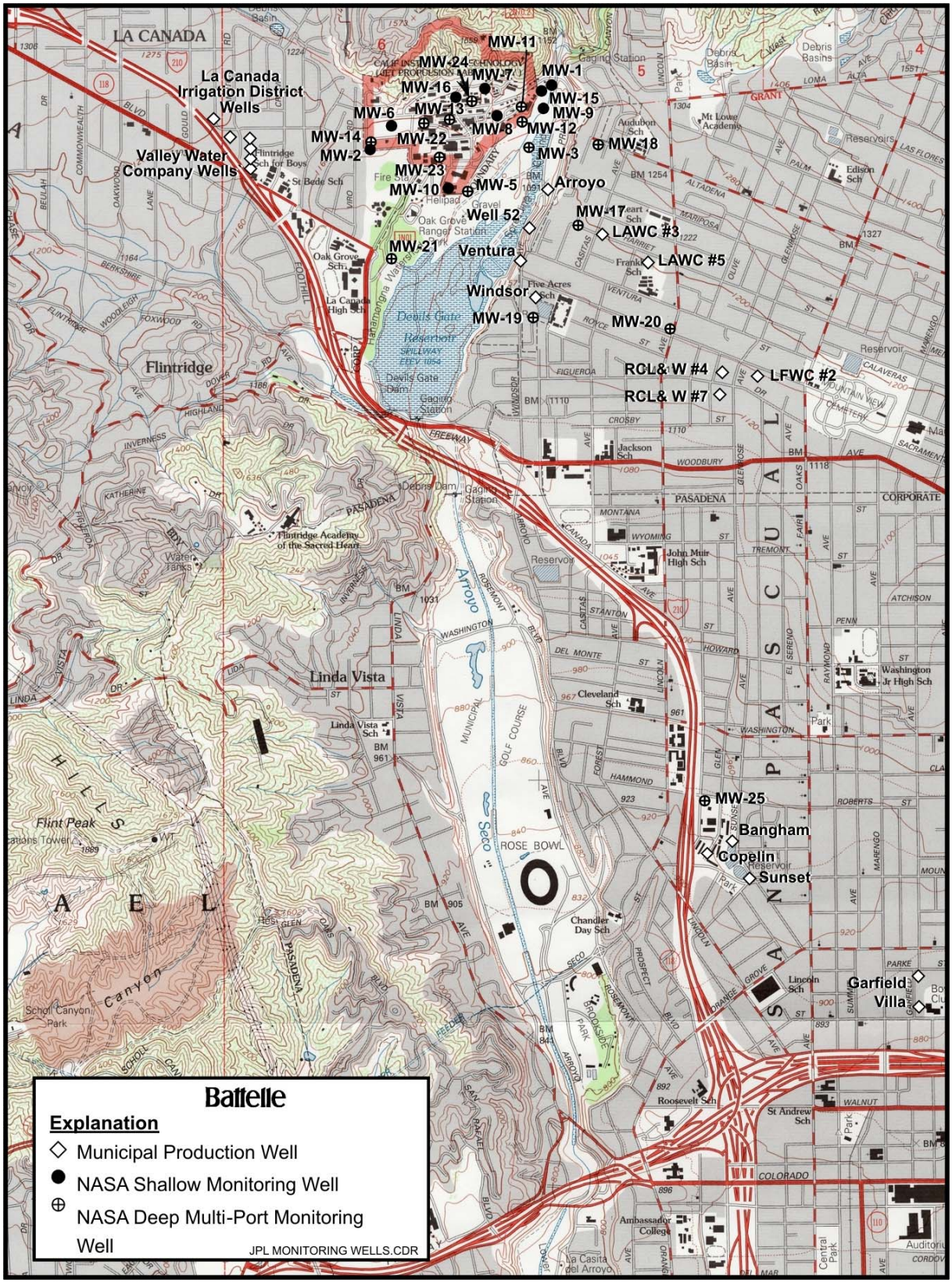

Figure D-1. Sample Locations

- RCLWA-4: located further south of LAWC wells. Low levels of perchlorate have been detected in RCLWA wells; however, other chemicals of interest from the JPL site have not been detected in these wells.
- LFWC-2: located further south and east of LAWC. Low levels of perchlorate have recently been detected in this well; however, higher levels of tetrachloroethene than those associated with the JPL site have historically been detected in this well.
- Garfield Well: City of Pasadena well located in the Sunset Reservoir area.

4.0 Laboratory Analytical Procedures

There are forty-two (42) sampling locations identified for this study. Samples collected from all locations will be analyzed for $\delta^{18}O$, $\delta^{2}H$, $^{87}Sr/^{86}Sr$, ^{3}H, DO, specific electrical conductance, ORP, dissolved nitrogen, total kjeldahl nitrogen, ammonia, nitrite/nitrate, ferrous/ferric iron, sulfite/sulfate, DOC, DIC, and TOC. Thirteen (13) of these locations will be sampled for perchlorate isotope analysis (i.e., $\delta^{37}Cl$, $\delta^{18}O$, $\delta^{17}O$ and $\Delta^{17}O$) and $^{3}H/^{3}He$. Samples will also be collected for inorganic chloride isotope analysis and microbial activity analysis from the 13 locations sampled for perchlorate isotopes, along with one upgradient location (MW-1).

Table D-2 outlines the method, sample volume requirement, sample preservation, and holding time for each analysis to be conducted. The field measurements will be conducted using the WTW Multi 340i handheld meter (or equivalent) and analyzed immediately at the site. All water quality parameters will be analyzed by a California-certified laboratory. Nitrate has only a 48-hour holding time without preservatives, so samples must be shipped the day they are collected. Battelle will notify the laboratory prior to shipping.

The protocols for isotope analyses have been provided by the laboratories and are included in the Attachments 3A through 3F.

Table D-2. Analytical Methods, Sample Volumes, Practical Quantitation Limit, Preservations, and Holding Times

Constituent	Units	Method	PQL	Sample Container	Preservation Method	Maximum Holding Time
Field Measurements						
pH	S.U.	WTW Multi 340i handheld meter	None	50 mL, poly	Not required	Analyze immediately in field
Temperature	°C	WTW Multi 340i handheld meter	None	50 mL, poly	Not required	Analyze immediately in field
Dissolved Oxygen (DO)	mg/L	WTW Multi 340i handheld meter	None	50 mL, poly	Not required	Analyze immediately in field
Oxidation-reduction potential (ORP)	S.U.	WTW Multi 340i handheld meter	None	50 mL, poly	Not required	Analyze immediately in field
Water Quality Parameters						
Dissolved Organic Carbon (DOC)	mg/L	415.1	1.0	250 mL, glass	Cool, 4°C H_2SO_4 to pH<2	28 days
Total Organic Carbon (TOC)	mg/L	415.1	1.0	250 mL, glass	Cool, 4°C H_2SO_4 to pH<2	28 days
Ferrous iron	mg/L	SM3500	0.05	2x40 mL VOA vials	Cool, 4°C, Field Filtered[(g)] HCL	14 days
Ferric iron	mg/L	SM3500	0.05	250 mL Poly	Cool, 4°C Field Filtered[(g)] Nitric Acid to pH<2	28 days
Nitrite-Nitrogen (NO_2-N)	mg/L	EPA 300.0	0.25	250 mL, poly	Cool, 4°C Nonpreserved	48 hours
Nitrate-Nitrogen (NO_3-N)	mg/L	EPA 300.0	0.25	250 mL, poly	Cool, 4°C Nonpreserved	48 hrs
Sulfide	mg/L	EPA 376.2	0.10	250 mL, poly or Glass	Cool, 4°C Zn Acetate	14 days
Sulfate	mg/L	EPA 300.0	0.5	250 mL, poly	Cool, 4°C Nonpreserved	28 days
Dissolved Inorganic Carbon	mg/L	EPA 415	2.0	1 L, poly or glass	pH<2 H_2SO_4	28 days
Ammonia-Nitrogen (NH_3-N)	mg/L	EPA 350.3	0.1	250 mL, poly or glass	Cool, 4°C pH<2 H_2SO_4	14 days
Total Kjeidahl Nitrogen	mg/L	EPA 351.4	0.25	250 mL, poly or glass	Cool, 4°C pH<2 H_2SO_4	14 days
Specific Electrical Conductance	µS/cm	EPA 120.1	10.0	250 mL, poly or glass	Cool, 4°C	28 days
Dissolved Nitrogen	mg/L	AM20GAX	0.4	40 mL, VOA vials	Banzalkonium Chloride	14 days

Table D-2. Analytical Methods, Sample Volumes, Practical Quantitation Limit, Preservations, and Holding Times (cont'd)

Constituent	Units	Method	PQL	Sample Container	Preservation Method	Maximum Holding Time
Stable Isotope Analysis of Perchlorate and Water						
$\delta^{18}O$, $\delta^{17}O$, $\Delta^{17}O$ [(a)]	ppt	UIC	1 ppb	Resin column	None	1 year
$\delta^{37}Cl$ [(a)]	ppt	UIC	1 ppb	Resin column	None	1 year
Stable Isotope Analysis of Water						
$\delta^{18}O$ [(b)]	ppt	UIC	None	20 mL glass with PolySeal cap	None	1 year
$\delta^{2}H$ [(c)]	ppt	UIC	None	20 mL glass with PolySeal cap	None	1 year
Inorganic Chloride ($\delta^{37}Cl$) [(d)]	ppt	UIC	None	125 mL ploy	Field filtered (0.45 micron); Cool, 4°C	1 year
Tritium-Helium Analysis of Water						
^{3}H	TU	Columbia	0.5	2x500 mL, glass	Cool, 4°C	6 months
$^{3}H/^{3}He$ [(e)]	TU	Columbia	0.5	2x500 mL, glass; 2 special copper tubes	Cool, 4°C	6 months
Isotope Analysis of Strontium						
$^{87}Sr/^{86}Sr$ [(f)]		MIT	None	250 mL, poly	Not required	6 months
Analysis for Evidence of Perchlorate-Reducing Microbial Activity						
perchlorate-reducing microbial activity [(h)]	active cells/mL	immunoprobe or functional gene probe	200	1 L glass	Cool, 4°C	48 hours

ppt = part per thousand (or per mil shift from reference)
PQL = practical quantitation limit
Femtomoles/L = 10^{-15} moles/L
TU = Tritium Units
Poly = polyethylene bottles

(a) The laboratory method protocol for perchlorate isotope analysis is included in Attachment 3A.
(b) The laboratory method protocol for oxygen isotope analysis in groundwater is included in Attachment 3B.
(c) The laboratory method protocol for hydrogen isotope analysis in groundwater is included in Attachment 3C.
(d) The laboratory method protocol for inorganic chloride isotope analysis in groundwater is included in Attachment 3F.
(e) The laboratory method protocol for tritium/helium isotope analysis is included in Attachment 3D.
(f) The laboratory method protocol for strontium isotope analysis is included in Attachment 3E.
(g) 50 cc filter syringes can be provided by laboratory.
(h) Samples will be analyzed by either the immunoprobe method or the functional gene probe method. The method will be chosen based on the level of sensitivity required, as determined by the laboratory.

5.0 Sampling Procedures

Each sample shall be designated with a unique identifier as discussed in Section 2.3.4 of Appendix A (Sampling and Analysis Plan). All samples will be collected in the appropriate sample containers provided by the laboratory and preserved as indicated in Table D-2. Unless otherwise noted, all samples should be collected in airtight, precleaned glass containers provided by the laboratory, which should be filled to the rim to avoid aqueous-air exchange.

Once collected, each containerized sample will be labeled and placed into a laboratory-specific sample cooler. The sample cooler will serve as the shipping container and will be provided by the laboratory. Samples are to be shipped to the laboratory promptly in order to provide ample time for analyses to be conducted within the established maximum holding times. The samples will be packed with shock-absorbent materials, such as bubble wrap, to prevent movement or breakage of the sample jars during transport. In addition, the samples shall be preserved with wet ice to meet the 4°C preservative requirement, if appropriate (see Table D-2). All samples shall be shipped under the chain-of-custody procedures discussed in Section 2.3.3 of Appendix A. The following provides special sampling procedures for perchlorate ($\delta^{37}Cl$, $\delta^{18}O$, $\delta^{17}O$, $\Delta^{17}O$), and $^{3}H/^{3}He$:

$\delta^{37}Cl$, $\delta^{18}O$, $\delta^{17}O$, and $\Delta^{17}O$ (Perchlorate Isotope) – Extraction of perchlorate from groundwater samples is accomplished by sorption onto a highly selective bifunctional anion exchange resin. For each sample to be collected, the laboratory provides a sampling apparatus, consisting of a prefilter and a glass column packed with a mixture of bifunctional resin and glass beads (see Figure D-2). The amount of resin in the sampling apparatus is based on the expected perchlorate concentration in the groundwater, and optimized to recover approximately 20 mg of perchlorate. Therefore, a location-specific resin column will be used at each sample location. In the field, groundwater will be passed through the sampling apparatus at a maximum flowrate of 0.3 liter per minute for perchlorate concentrations greater than 6 ppb, and 0.9 liter per minute for perchlorate concentrations from 2 - 6 ppb. Table D-3 summarizes the estimated sample volume required at each location and the estimated time required for sample collection. Note that each bulk water sample collected for perchlorate isotope analysis will be analyzed for perchlorate concentration to determine the actual volume required for the perchlorate isotope sample. Once the total sample volume has passed through the resin column, the sampling apparatus will be disconnected, drained, plugged and returned to the UIC Environmental Isotope Geochemistry Laboratory for analysis (see also Attachment 3A).

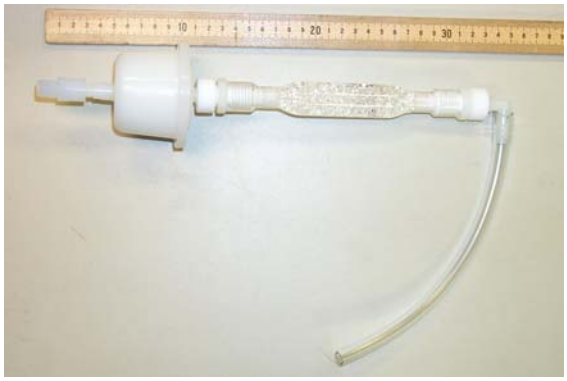

Figure D-2. Perchlorate Sampling Apparatus

Table D-3. Perchlorate Sample Volumes

Sample Location	ClO_4^- Concentration in Latest Sampling Event[a] (µg/L)	Total Sample Volume Required[b] (L)	Estimate Sample Collection Time[c] (hours)
MW-17 Screen 3	133	150	8.4
MW-18 Screen 4	15	1,333	74.1
MW-21 Screen 1	7.3	2,740	152.2
MW-21 Screen 3	4.9	4,082	75.6
MW-24 Screen 1	4880	4	0.2
MW-24 Screen 2	80.0	250	13.9
MW-25 Screen 1[d]	8.1	2,469	137.2
MW-25 Screen 2[d]	12	1,667	92.6
MW-25 Screen 3[d]	8.7	2,299	127.7
MW-25 Screen 4[d]	8.1	2,469	137.2
VWC-1	4.2	4,762	88.2
LAWC-3	28	714	39.7
RCWLA-4	5.5	3,636	67.3
LFWC-2	5.5	3,636	67.3
Garfield	8.8	2,273	126.3

(a) The latest sampling event for the monitoring wells range from 11/2/04 to 12/21/04. The latest sampling event for the production wells range from 11/01/04 to12/29/04. The VWC-1 production well has not been sampled for perchlorate since 09/06/02.
(b) The final sample volume will be based on the 2005 first quarterly groundwater monitoring results.
(c) For perchlorate concentrations greater than 6 ppb, the maximum flowrate is 0.3 L/min. Between 2 and 6 ppb, the maximum flowrate is 0.9 L/min. For less than 2 ppb, it is 3.5 L/min.
(d) Two of the four screens at MW-25 will be sampled for perchlorate isotopes. The final decision about which well screens will be sampled will be based on the 2005 first quarterly groundwater monitoring results.

Tritium/Helium– Proper collection of a water sample for $^3H/^3He$ analysis requires (1) filling duplicate special copper sample tubes for helium analysis and (2) filling two 500-mL bottles for tritium analysis. The special copper sample tubes have a 3/8-inch diameter, 30-inch length, contain about 44 mL of water, and are fitted with stainless steel pinch-off clamps at each end. Safety-coated 500-mL glass bottles with polycone seals will be used for the tritium sample. A headspace of several mililiters should be left in the bottle to prevent breakage when warming.

Damage to the ends of the copper tube may prevent proper attachment of the sample tube to the vacuum extraction line for sample preparation at the contract laboratory. The copper tube, which is fixed in an aluminum channel holding the stainless steel pinch-off clamps, is connected to a closed path from the well or pump. The connection to the well or pump can be of almost any material including plastic, rubber, or metal tubing, providing that all connections are airtight and will not come loose when back pressure is applied during closing of the copper tubes. Clear plastic tubing (Tygon) is preferred because one can observe if air bubbles are present in the water line. It is recommended that connections be secured with stainless steel hose clamps, again being careful not to damage the end of the copper tube. The length of the path from the well or pump discharge should not exceed about 5 feet to minimize the possibility of gas separation from the water sample prior to sealing the copper tube. Any trapped air or formation of gas bubbles in the helium water sample will produce erroneous results.

1. Flush and fill copper tube for He analysis, which can normally be done within 5 minutes.

2. Remove and discard the plastic caps that cover the ends of the copper tube, taking care not to scratch or bend or otherwise damage the ends of the copper tube.
3. Apply back pressure to the discharge end of the copper tube during flushing. A small valve and suitable compression type fittings to attach the valve to the discharge end of the copper tube will need to be obtained to aid in sample collection. Figures 1 and 2 in Attachment 4B show diagrams of the copper tube and back-pressure valve assembly, respectively. The valve should not be closed completely during filling because a steady flow of water must be maintained through the copper tube during sealing.
4. Tap forcibly the entire line from the well through the copper tube to dislodge any gas bubbles that may be in the line or copper tube. Hold the copper tube at an approximate 45-degree angle with the discharge point up, to ensure that gas bubbles, if present, will be completely flushed. Tapping normally requires 1 minute to complete.
5. Once water flowing through the copper tube is free of any gas bubbles, the socket wrench is used to close the bolts on the pinch-off clamps, beginning with the bolts at the discharge end.
6. Before turning the bolts, be sure to position the copper tube in the approximate center of the pinch-off clamp. There are two bolts on each clamp. Turn the bolts in successive order (back and forth approximately four (4) times until firmly closed) so that the blades of the pinch-off clamp close as evenly as possible. A socket wrench with 13-mm (note metric bolt) socket is used to turn the bolts that close the pinch-off clamps.
7. The pinch-off clamps are machined to leave about a 1-mm space when the bolts are turned all the way down; however, care should be taken not to overtighten and strip the threads on the bolts.
8. After tightening the discharge end bolts, tighten the upstream bolts in the same manner, again centering the copper tube between the blade.
9. When done, double check to be sure that all bolts are tight. The sample is then complete and the copper tube can be disconnected from the well or pump.
10. Remove the back-pressure valve from the discharge end of the copper tube. Precautions should be taken not to scratch or otherwise damage the ends of the copper tubes. If waters are corrosive, such as seawater or other saline or acidic waters, the ends of the copper tubes should be washed with dilute water to prevent corrosion, which might prevent obtaining a proper seal when extracting the noble gases.
11. Care should be taken not to further bend the ends of the sealed copper tubes because they can easily break off. If the tubes were received with plastic caps protecting the ends, do not replace the caps after filling (see also Attachment 4B).

6.0 Quality Control/Quality Assurance

The overall quality objectives for this project and the performance criteria necessary to meet these objectives are discussed in Section 1.7 of Appendix A.

As discussed in Section 2.5 of Appendix A, quality control (QC) requirements include both field and laboratory checks necessary to ensure the integrity of the analytical results. QC checks include proper sample acquisition and handling procedures, as well as proper laboratory quality assurance (QA).

6.1 Field Quality Control Checks

Typical field QC checks include the collection of field duplicates, equipment rinsate samples, trip blanks, and field blanks. Of these field QC samples, only the field duplicates are applicable to this isotope sampling program.

Duplicate samples will be collected by retaining consecutive samples from the sample pump. Field duplicate samples will be collected at a rate of 10% of the total number of samples collected during this sampling program. If fewer than 10 samples will be collected, one duplicate sample will be collected.

The other field QC samples are not applicable to this isotope sampling program for the following reasons:

- Equipment rinsate blanks are collected to ensure that nondedicated sampling devices have been decontaminated effectively, and are only collected for VOC analysis;
- Trip blanks ensure that samples are not contaminated during shipping, and accompany samples to be submitted for VOC analysis only;
- Field blanks are collected to detect possible contamination of the samples from airborne hydrocarbons during sample collection.

6.2 Laboratory Quality Control Checks

Laboratory QC is addressed through the analysis of laboratory QC samples, documented internal and external laboratory QC practices, and laboratory audits. Laboratory blank samples and laboratory control samples (including matrix spike/matrix spike duplicates [MS/MSD]) for the water quality parameters listed in Table D-2 of this attachment will be collected in accordance with the procedures listed in Section 2.5.1 of Appendix A.

Laboratory QC samples for the isotope analysis will include analysis of standard solutions to demonstrate the accuracy of the analytical method by measuring a known concentration. The following standard solutions will be used for laboratory QC purposes:

- All reported oxygen and hydrogen isotope compositions will be calibrated against Vienna Standard Mean Ocean Water (VSMOW);
- All reported chlorine isotope ratios will be calibrated against Standard Mean Ocean Chloride (SMOC);
- All reported $^{3}H/^{3}He$ results will be calibrated against standard atmospheric air;
- All reported strontium isotope compositions will be calibrated against the NBS-987 standard.

6.3 Instrument/Equipment Testing, Inspection, and Maintenance

A water quality meter will be used in the field during this sampling program. As discussed in Sections 2.6 and 2.7 of Appendix A, calibration of field equipment will be conducted according to manufacturer's recommendations. All field instruments will be calibrated before each day of use; and a calibration check at the end of the day will be performed to verify that the instrument remained in good working condition throughout the day. The calibration of all field equipment will be documented in the field logbook.

Laboratory instrument maintenance will be performed in accordance with standard preventive maintenance procedures and schedules. Laboratory instrument calibration will be performed as specified in the attached method documentation (Attachments 3A through 3F).

7.0 Data Evaluation

Analyses to be completed as part of this study include perchlorate isotopes ($\delta^{37}Cl$, $\delta^{18}O$, $\delta^{17}O$ and $\Delta^{17}O$), groundwater isotopes ($\delta^{18}O$, $\delta^{2}H$, $\delta^{37}Cl$), strontium ($^{87}Sr/^{86}Sr$), tritium dating (^{3}H only and $^{3}H/^{3}He$), perchlorate-reducing microbial activity, and several geochemical parameters to evaluate biodegradation. The results of the perchlorate isotope analyses will be used to determine the extent of dissolved perchlorate originating from the JPL site. In addition, historical water chemistry data will be combined with the stable isotope analyses and groundwater dating ($\delta^{18}O$, $\delta^{2}H$, $^{87}Sr/^{86}Sr$, ^{3}H, and $^{3}H/^{3}He$) to trace fate and transport of the perchlorate and improve the understanding of groundwater flow conditions within the aquifer.

8.0 References

Hatzinger, P.B., M.D. Whittier, M.D. Arkins, C.W. Bryan, and W.J. Guarini. 2002. "In-Situ and Ex-Situ Bioremediation Options for Treating Perchlorate in Groundwater." *Remediation*, 12(2): 69-86.

ATTACHMENT 1

TECHNICAL MEMORANDUM: NEIL STURCHIO, Ph.D.

Date: November 7, 2004

To: Project Team

From: Neil C. Sturchio

Subject: Recommendations for Stable Isotope Study to Determine Source(s) of Perchlorate in Off-Facility Groundwater in the Vicinity of the Jet Propulsion Laboratory

Objective

This technical memorandum recommends specific isotopic (and other) measurements of groundwaters for the purpose of fulfilling the objectives stated in the RI Addendum Work Plan (Battelle, 2004) as follows: *"(1) to evaluate the downgradient (southern) extent of chemicals that originate from the JPL facility, and (2) to better understand the occurrence of perchlorate distribution in the vicinity of the Sunset Reservoir area."* The RI Addendum Work Plan (Battelle, 2004) was used for site-specific background information, augmented with additional information obtained from the Battelle Technical Memorandum (October 22, 2004) and from the October 25, 2004 meeting held at the Battelle Office in Columbus, OH, for preparation of this memorandum. Additional references are cited.

Outline of Strategy

The recommended strategy for this study is to pursue the most direct lines of evidence that can be used to identify the source(s) of perchlorate in the study area. There are three approaches. The first and most direct approach is to obtain stable isotope ratio measurements for perchlorate extracted from groundwater. This is the most powerful method for perchlorate source identification. The second approach is to obtain additional isotopic measurements for the groundwater, i.e., hydrogen (δ^2H) and oxygen ($\delta^{18}O$) isotope ratios, as well as measurements that will constrain groundwater age, including tritium/helium-3 ($^3H/^3He$) ratios, and chorofluorocarbons (CFCs) and sulfur hexafluoride (SF_6) concentrations, which can be used for water source identification and for evaluation of groundwater mixing and travel time. Both of these first two approaches provide information that is crucial for testing hypothetical scenarios for the source(s) and subsurface transport rates and pathways of perchlorate in the study area. A third approach, primarily for the purpose of tracing the maximum extent of the JPL contaminant plume, is to measure to distribution of co-contaminants such as CCl_4, Sr, or other trace substances known to be present in the plume. Both chemical and isotopic measurements would be part of the third approach.

Approach #1: Isotopic Composition of Perchlorate

There are three important questions that can be addressed directly using stable isotope ratio measurements of perchlorate extracted from groundwaters in the study area: (1) Is there any evidence for the presence of natural perchlorate that may have been derived from past application of Chilean nitrate-derived fertilizers? (2) Is perchlorate from the Colorado River

water, imported by the Metropolitan Water District (MWD) and mixed with local meteoric water in the aquifer, isotopically distinct from JPL-derived perchlorate? (3) Is perchlorate undergoing natural attenuation by microbial reduction in the aquifer?

Recent work has shown that there are significant differences in the stable chlorine (Cl) and oxygen (O) isotope ratios of perchlorate from different sources (Cl isotopes - Ader et al., 2001; O isotopes - Bao and Gu, 2004; both Cl and O isotopes - Sturchio et al., 2004). The work presented by Bao and Gu (2004) and Sturchio et al. (2004) demonstrated that trace amounts of perchlorate can be extracted from different matrices, including Chilean nitrate evaporites and groundwaters, for accurate and precise isotopic analyses. These extractions were done with highly perchlorate-selective bifunctional anion exchange resins using methods developed by B. Gu and colleagues at Oak Ridge National Laboratory. In addition, microcosm experiments performed independently by two groups used pure cultures of perchlorate-reducing microbes to determine the Cl kinetic isotope effect of microbial perchlorate reduction. Both groups found Cl kinetic isotope effects of ~15‰, whereby residual perchlorate was strongly enriched in ^{37}Cl (Sturchio et al., 2003; Coleman et al., 2003). No data have yet been reported for the oxygen kinetic isotope effect accompanying microbial perchlorate reduction, although it is expected to be large.

Chlorine isotope ratios: $\delta^{37}Cl$ – Chlorine has two stable isotopes, ^{35}Cl and ^{37}Cl, that occur naturally in the ratio of ~3:1. $^{37}Cl/^{35}Cl$ ratios are normally reported in terms of per mil deviation relative to Standard Mean Ocean Chloride ($\delta^{37}Cl_{SMOC}$). The range of reported $\delta^{37}Cl$ values for *anthropogenic* perchlorate (including $NaClO_4$, $NaClO_4.H_2O$, $KClO_4$, $RbClO_4$, and $CsClO_4$ reagents) is –3.1 to +2.3 ‰ (Ader et al., 2001; Sturchio et al., 2004). This range is based on the analysis of only 10 separate reagents. The range of reported $\delta^{37}Cl$ values for *natural* perchlorate is –14.5 to –11.8 ‰ (Sturchio et al., 2004), and is based on only 4 analyses of Atacama (Chile) nitrate evaporites and fertilizer derived therefrom. With the caveat that there are not yet many data and the picture may change, we have observed that δ37Cl values of natural perchlorate are 10-15‰ *lower* than those of anthropogenic perchlorate.

Oxygen isotope ratios: $\delta^{18}O$ - Oxygen has three stable isotopes, ^{16}O, ^{17}O, and ^{18}O, which occur in the ratio ~2000:4:1. These three isotopes are normally fractionated by mass-dependent processes so that the information obtained by measuring $^{17}O/^{16}O$ is identical to that obtained by measuring $^{18}O/^{16}O$, therefore only the $^{18}O/^{16}O$ ratio is normally measured and is expressed in per mil deviation from the $^{18}O/^{16}O$ ratio of Vienna-Standard Mean Ocean Water ($\delta^{18}O_{V\text{-}SMOW}$). For *anthropogenic* perchlorate (compounds listed above), the range of $\delta^{18}O$ values is –24.7 to –16.1‰, whereas the range of $\delta^{18}O$ values for *natural* perchlorate is –9.3 to –4.2‰ (Bao and Gu, 2004; Sturchio et al., 2004). In contrast to the Cl isotope ratios, $\delta^{18}O$ values of natural perchlorate are 10-15‰ *higher* than those of anthropogenic perchlorate.

A comparison of the distinct $\delta^{37}Cl$ and $\delta^{18}O$ values for anthropogenic and natural perchlorates is shown in Figure 1. Also shown in Figure 1 are data for perchlorate extracted from a sample of groundwater from Edwards Air Force Base, indicating that it has an anthropogenic source. Based on the data shown in Figure 1, it can be assumed that perchlorate having a $\delta^{37}Cl$ value greater than -5‰ is dominantly anthropogenic, whereas perchlorate having a $\delta^{37}Cl$ value less than -10‰ is dominantly natural. Likewise, perchlorate having a $\delta^{18}O$ value less than –15% is dominantly

anthropogenic, whereas perchlorate having a $\delta^{18}O$ value greater than –10% is dominantly natural. Within the field of anthropogenic perchlorate, there may be a fairly wide range of both $\delta^{37}Cl$ and $\delta^{18}O$ values, possibly allowing JPL-derived perchlorate to be distinguished from other anthropogenic perchlorate, e.g. that brought in with Colorado River water by the Metropolitan Water District (MWD). Not shown in Figure 1 are preliminary $\delta^{37}Cl$ values obtained for perchlorate from groundwater on the Kerr-McGee facility at Henderson, NV (+0.9%) and for water from the Las Vegas Wash (+0.4‰) that feeds Lake Mead and the Colorado River. These values are indistinguishable within the ±0.3% uncertainty of the measurement. The Kerr-McGee facility has manufactured and released perchlorate since the 1950s and is believed to have been a major contributor of perchlorate to the Colorado River.

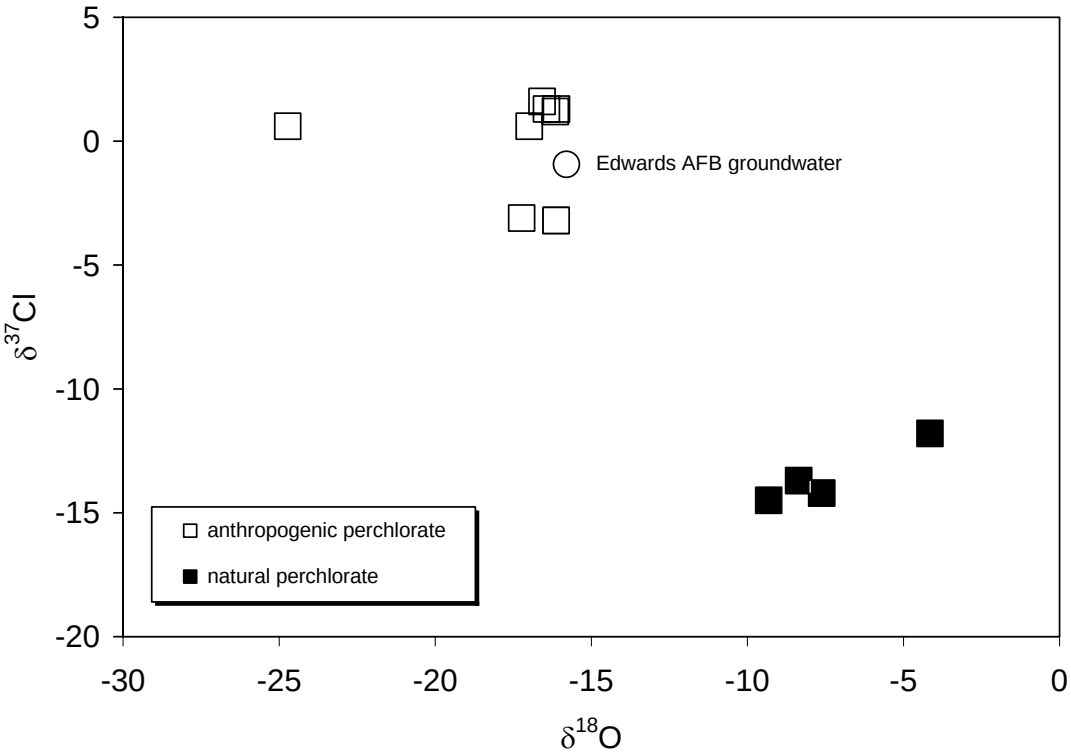

Figure 1. *Diagram showing $\delta^{37}Cl$ vs. $\delta^{18}O$ values for anthropogenic and natural perchlorate samples, compared with a sample of perchlorate extracted from groundwater at Edwards Air Force Base.*

Oxygen isotope ratios: $\Delta^{17}O$ - In addition to measuring the $^{18}O/^{16}O$ ratio of perchlorate, the $^{17}O/^{16}O$ ratio provides an especially diagnostic indication of natural perchlorate. This is because of the discovery that natural perchlorate has a large excess of ^{17}O relative to that expected from oxygen having normal terrestrial mass-dependent fractionation in which $\delta^{17}O \approx 0.52 \times \delta^{18}O$ (Bao and Gu, 2004). The reason for this ^{17}O-excess is that the natural perchlorate is produced in the atmosphere by reaction of ozone (O_3) with volatile chlorine (e.g., HCl). Natural perchlorate thus inherits its ^{17}O-excess from atmospheric O_3, which is known to have a large ^{17}O-excess (Thiemens, 1999). Bao and Gu (2004) demonstrated that anthropogenic perchlorate does not have a measurable ^{17}O-excess, whereas natural perchlorate has a large measurable ^{17}O-excess

[expressed as $\Delta^{17}O \approx \delta^{17}O - (0.52 \times \delta^{18}O)$], ranging from $\Delta^{17}O = +4.2$ to $+ 9.6‰$. The relationship of the $\delta^{17}O$ values to the $\delta^{18}O$ values of natural and anthropogenic perchlorates is shown in Figure 2 (from Bao and Gu, 2004).

The presence of a measurable ^{17}O-excess in perchlorate extracted from groundwater in the study area would indicate the presence of natural perchlorate, which we anticipate to be isotopically distinct from JPL-derived perchlorate with respect to all three isotopic parameters being discussed here – $\Delta^{17}O$, $\delta^{18}O$, and $\delta^{37}Cl$. The most likely source of natural perchlorate may be fertilizer derived from Chilean nitrate evaporite deposits. Such fertilizer was once widely applied in citrus orchards throughout California. It is important to note that a small percentage of admixed natural perchlorate (e.g. ~5% or more) could be distinguished in a sample that is dominantly anthropogenic – any significant deviation from $\Delta^{17}O = 0$ signifies the presence of some natural perchlorate.

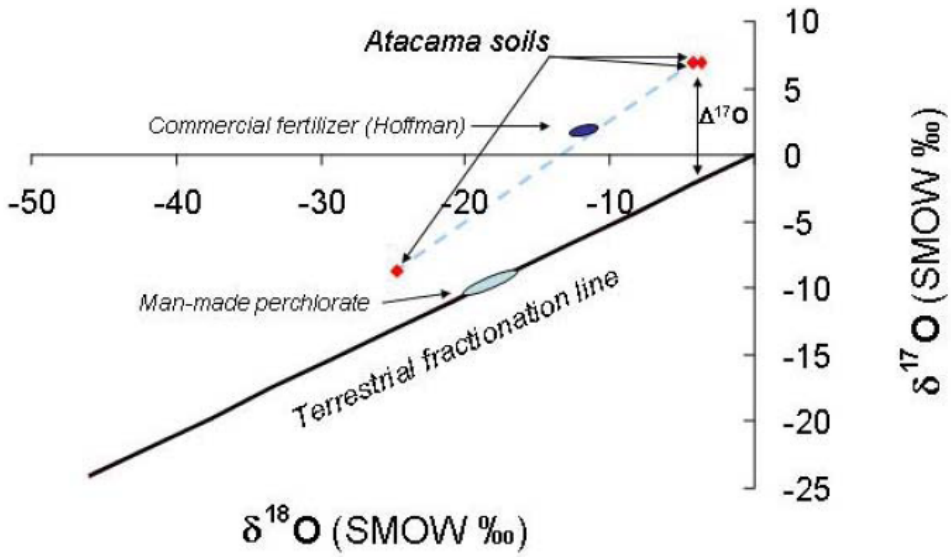

Figure 2. *Diagram showing $\delta^{17}O$ vs. $\delta^{18}O$ values of man-made (anthropogenic) and natural perchlorate (Atacama "soils" and Hoffman fertilizer), from Bao and Gu (2004).*

Identification of natural attenuation from perchlorate isotopic compositions - The Cl kinetic isotope effect of natural attenuation of perchlorate by microbial reduction is sufficiently large (~15‰) that reduction of 4% or more perchlorate can be identified by a resolvable (+0.61‰) shift in $\delta^{37}Cl$ value of the residual. Although the concomitant O kinetic isotope effect has not yet been reported for microbial perchlorate reduction, it might be expected to have a similar or perhaps larger magnitude than the Cl kinetic isotope effect. If the two effects are assumed to be identical, then the trajectory of hypothetical residual perchlorate in Figure 1 would move toward the upper right along a line with a slope of 1. After 50% reduction, the residual perchlorate would be enriched in ^{37}Cl and ^{18}O by 10.4‰; after 80% reduction, by 24.1‰; after 90% reduction, by 34.5‰, and after 99% reduction, by 69‰! If natural attenuation is progressive along a flow path, then δ values of samples collected along the flow path would define a linear

array in Figure 1. The $\Delta^{17}O$ value of residual perchlorate is not affected by microbial reduction, however, because kinetic isotope effects are mass-dependent.

Approach #2: Isotopic Composition and Age of Water

In the event that perchlorate isotopic compositions are not sufficiently diagnostic of perchlorate sources in the study area, then additional lines of evidence must be sought to meet the objectives of the study. The next most direct line of evidence regarding perchlorate source lies with the source of the water containing the perchlorate, and the age of that water.

Hydrogen and oxygen stable isotopic compositions of groundwater reflect the isotopic composition of the recharge water. Tritium, a radioactive isotope of hydrogen (^3H), has a half-life of 12.4 years, and its activity relative to its stable decay product ^3He can indicate the age of the groundwater. Measurements of certain trace gase concentrations (CFCs and SF_6) are also useful for age determination of young (≤50 year) groundwaters.

In the study area, three types of water have been identified based on major ion compositions: Type 1 (Ca-HCO_3 type water, believed to represent recent recharge of precipitation falling on the San Gabriel Mountains); Type 2 (Na-HCO_3 type water, found in deeper portions of the aquifer, having similar TDS concentrations but with Na as the dominant cation); and Type 3 (Ca-HCO_3-Cl-SO_4 type water, found upgradient and to the west of JPL, believed to be a mixture of Type 1 water and higher-TDS Colorado River water imported by the Metropolitan Water District).

Hydrogen and oxygen isotope ratios: δ^2H and $\delta^{18}O$ - Colorado River water is relatively depleted isotopically (i.e., lower δ^2H and $\delta^{18}O$ values) compared with local meteoric water in the study area (Coplen and Kendall, 2000), and therefore it might be expected that this difference would be reflected in a distinct isotopic composition of Type 3 water relative to Types 1 and 2 in the study area. Evaluation of mixing between Colorado River water and local meteoric water may be complicated by seasonal variations. Types 1 and 2 water could also have distinct stable isotope compositions. The stable isotopic compositions of the water would complement the discrimination of water types that has been based on ionic compositions.

Tritium activity: $^3H/^3He$ dating – The age of groundwater (time since isolation from the atmosphere) can be determined fairly well for young (≤50 year) water using $^3H/^3He$ dating (Schlosser et al., 1988, 1989). Tritium-helium measurements can be used for groundwater sampled from selected wells to evaluate the validity of particle-tracking groundwater flow model (Battelle Technical Memorandum, October 22, 2004). The most important application of such measurements would be near the Sunset Reservoir wells (i.e. at new monitoring well #26). If $^3H/^3He$ measurements indicate that flow models are valid, then the so-called bomb tritium pulse (mid-1960s) should not yet be evident in the Sunset wells because that water should predate the mid-1960s. However, according to the flow model, the bomb pulse may have passed the location of the proposed new monitoring well #25 and may not yet have arrived at the location of proposed new monitoring well #26. The question of groundwater age would be well-constrained at a number of key locations by $^3H/^3He$ measurements.

Chlorofluorocarbons (CFCs) and Sulfur Hexafluoride (SF_6) – A useful complement (or alternative) to $^3H/^3He$ measurements for groundwater age determination of young (≤50 year) groundwater is the measurement of CFC concentrations and SF_6 (Plummer et al., 1993). The main advantage of this technique, which is based on equilibrium gas solubilities in recharge water and knowledge of the history of atmospheric concentrations of the gases, is that it is much faster and less expensive than $^3H/^3He$ measurement. The CFC and SF_6 measurements are done by gas chromatography with electron capture detector.

Approach #3: Tracing the Extent of JPL Contaminant Plume

Depending on the results of the first two approaches, the third approach may be redundant. For example, if perchlorate derived from JPL is found to be isotopically distinct from that found in upgradient monitoring wells and that found in the Sunset Reservoir wells, then the objectives of the study will have been achieved and this approach will be unnecessary. However, if the first two approaches yield ambiguous results and further data are required to resolve the issues, then the third approach will be worth pursuing.

Tracing the extent of carbon tetrachloride migration from JPL – According to available data (Battelle, 2004; Battelle Technical Memorandum, October 22, 2004) the only known source of carbon tetrachloride (CCl_4) in the study area is JPL. Standard EPA methods for VOC analysis have a detection limit near 1 ppb. Much lower detection limits (~0.01 ppb) can be obtained by using a combination of large sample volumes, purge-and-trap methods (Holt et al., 2001), and solid-phase microextraction, combined with GC-combustion-IRMS techniques. This approach would also provide C isotope ratio analysis of the CCl_4. It could be attempted with the caveat that there could be sub-ppb concentrations in the study area that are unrelated to JPL discharges, resulting in false positive identification of the extent of the JPL contaminant plume.

Isotope ratios of other trace contaminants in JPL contaminant plume – If other contaminants can be identified that are unique to the JPL contaminant plume, then they can be used to trace its extent. Their uniqueness may be either in their identity (as constituents not normally found in groundwater) or their characteristic isotope ratios (e.g., reagent Li; Qi et al., 1997). This approach may require initial assays of on-site groundwater to identify constituents that might serve well as off-site tracers.

Other indicators of natural attenuation - Chemical measurements of redox-sensitive parameters such as dissolved oxygen, Eh, nitrate-nitrite-ammonium, ferrous-ferric iron, and others, as well as the amount of dissolved organic carbon, can also give useful information about the potential for occurrence of natural attenuation. In addition, the presence of the products of reductive dechlorination of known contaminants PCE and TCE (cis-DCE and vinyl chloride) would indicate that conditions favorable for natural attenuation are present within the aquifer or the overlying vadose zone. These types of measurements could be useful in assessing the potential for (or, if found, the rate of) natural attenuation of perchlorate in the JPL plume.

Recommendations for Sampling

Sampling locations recommended for this project are:

MW-1, -9, and –15 upgradient wells
MW-17 within known plume
MW-19, -20, -21 downgradient near site
MW-24 source area at JPL
MW-25 and –26 new wells between MW-19 and Sunset Reservoir wells
MWD Colorado River water

Time line for sampling – It is recommended that the next round of sampling (early 2005) should include analysis of at least 15-20 samples for some or all of the following parameters. These are grouped into two priority levels and it is assumed that a standard suite of analyses will also be done for each sample (i.e., temperature, pH, major cations and anions, VOCs). For optimal results, in terms of limiting the scope and expense of the study, the first-level priority analyses should be sampled for and performed as soon as possible. If budgetary constraints permit, the second-level priority analyses should also be done in the same sampling round as the first-level priority analyses. However, the second-level priority analyses may also be viewed as optional measurements that could be obtained in a subsequent round of sampling, after considering the results of the first-level round of sampling, for the purpose of resolving issues that may arise from the results of the first-level sampling. It is recommended that, in any case, all measurements be performed on duplicate samples to increase the confidence level of the results.

First-level priority:

1. Perchlorate for $\delta^{37}Cl$ and $\delta^{18}O$, and $\Delta^{17}O$
2. Water for $\delta^{2}H$ and $\delta^{18}O$
3. CFCs and SF_6

Second-level priority:

1. Tritium-helium dating
2. low-level CCl_4, $^{87}Sr/^{86}Sr$ and other JPL-specific groundwater tracers
3. Redox-sensitive parameters, organic carbon, other indicators of natural attenuation

Perchlorate for stable isotope analysis - In multi-port monitoring wells, samples should be taken from individual screened levels where perchlorate was detected in the most recent sampling. More than one screened level per well should be sampled where data indicate that there is a variation in water type with depth. Sampling for perchlorate should be done using highly perchlorate-selective bifunctional ion exchange resin (Purolite A-530E or equivalent) in columns designed for the perchlorate concentration range expected, based on available data from most recent sampling. Water should be pre-filtered through a 5-micrometer pore-size filter before the resin column. Flow rate through the resin column should not exceed 0.5 L/minute. A volume of water containing at least 20 mg of perchlorate should be passed through the column to ensure sufficient yield of perchlorate for multiple stable isotope analyses.

Water for stable isotope analysis – Unfiltered or filtered water is collected in glass bottle (at least 20 mL) with Polyseal cap. Isotopic measurements will be made by gas-source isotope ratio mass spectrometry following hydrogen equilibration or Zn reduction (for δ^2H) and CO_2 equilibration (for $\delta^{18}O$).

CFCs and SF_6 – Water must be sampled in a way that carefully avoids entrapment of air bubbles. A simple but effective method for sampling is described on the web site of the USGS Reston Chlorofluorocarbon Laboratory (http://water.usgs.gov/lab/cfc/sampling/newmethod.htm).

Tritium-helium dating – Unfiltered water is collected in a length of 3/8-inch diameter copper tube that is clamped shut after removal of air bubbles. Dissolved gases are extracted in the laboratory for measurement of He and Ne concentrations and $^3He/^4He$. Degassed water is maintained to allow ingrowth of additional ^3He from tritium and then re-extracted after about 6 months for measurement of ^3He concentration.

Other constituents – Sampling and analysis of other constituents to be determined following identification of appropriate constituents in JPL groundwater and refinement of strategy.

Cost estimate for analytical work – The cost estimate shown here is based on a per-sample fee for analysis in the 10-50 sample range. The total can be pro-rated for additional samples. Recommendation for minimum sampling density is 15 samples from the study area, analyzed in duplicate for perchlorate isotopes, water isotopes, CFCs and SF_6, along with 6 samples analyzed in duplicate for tritium-helium dating. (Data interpretation and report writing costed separately.)

Stable isotope analysis of perchlorate *$1500./sample*
Including provision of custom ion-exchange column and pre-filter assembly for sampling; extraction and purification of perchlorate from ion-exchange column; duplicate analysis of $\delta^{37}Cl$, $\delta^{18}O$, and $\Delta^{17}O$
Recommended lab: UIC Environmental Isotope Geochemistry Laboratory

Stable isotope analysis of water *$150./sample*
Including duplicate δ^2H and $\delta^{18}O$ analysis by standard methods
Recommended lab: UIC Environmental Isotope Geochemistry Laboratory

CFC and SF_6 analysis of water *$600./sample*
Including duplicate GC-ECD measurements by standard methods
Recommended lab: USGS Reston CFC Laboratory

Tritium-helium analysis of water *$1000./sample*
Including provision of aluminum frame, clamps, and copper tubing for sample collection. (*Requires a separate sample for duplicate measurement)*
Recommended lab: Environmental Tracer Group, LDEO, Columbia University

---

Cost for minimum sample density (15 samples in duplicate for perchlorate stable isotopes, δ^2H and $\delta^{18}O$ of water, CFCs and SF_6)	$33,750.
Cost for 6 samples for tritium-helium dating (counts as 12 for duplicates)	$24,000.
Total Cost as described for minimum recommended sample density	**$57,750.**

References:

Ader M., Coleman M. L., Doyle S. P., Stroud M., Wakelin D., 2001. Methods for the stable isotopic analysis of chlorine in chlorate and perchlorate compounds. *Analytical Chemistry* 73, 4946-4950

Bao H. and Gu B., 2004. Natural perchlorate has a unique isotope signature. *Environmental Science and Technology* 38, 5073-5077.

Battelle, 2004. *Operable Unit 3 Remedial Investigation (RI) Addendum Work Plan (Pasadena Sampling Plan [PSP]-2004-1) (Draft Final).* EPA ID# CA9800013030, September 2004.

Coleman M.L., Ader M., Chauduri S., and Coates J. D., 2003. Microbial isotopic fractionation of perchlorate chlorine. *Applied and Environmental Microbiology* 69, 4997-5000.

Coplen, T.B., and Kendall, C., 2000. Stable isotope and oxygen isotope ratios for selected sites of the U.S. Geological Survey's NASQAN and Benchmark surface-water networks. *U.S. Geological Survey Open-File Report* 00-160, 409 p.

Holt B. D, Heraty L. J., and Sturchio N. C., 2001. Extraction of chlorinated aliphatic hydrocarbons from groundwater at micromolar concentrations for isotopic analysis of chlorine. *Environmental Pollution* 113, 263-269.

Plummer L.N., Michel R.L., Thurman E.M., and Glynn, P.D., 1993. Environmental tracers for age-dating young ground water: in Alley, W.M., ed., *Regional Ground-water Quality*, Chap. 11, Van Nostrand Reinhold, New York, p. 255-294.

Qi H.P., Coplen T.B., Wang Q.Zh., and Whang Y.H.,1997. Unnatural isotopic composition of lithium reagents. *Analytical Chemistry* 69, 4076-4078.

Schlosser P., Stute, M., Dorr, H., Sonntag, C., and Munnich, K.O., 1988. Tritium/^{3}He dating of shallow groundwater. *Earth and Planetary Science Letters* 89, 353-362.

Schlosser P., Stute, M., Sonntag, C., and Munnich, K.O., 1989. Tritiogenic ^{3}He in shallow groundwater. *Earth and Planetary Science Letters* 94, 245-256.

Sturchio N. C., Bohlke J. K., Horita J., Gu B., Brown G. M., 2004. Environmental isotope forensics of perchlorate. *Proceedings of Perchlorate-2004 Conference*, Groundwater Resources Association of California, Glendale, CA, August 3-5, 2004.

Sturchio N. C., Hatzinger P., Adkins M., Suh C., and Heraty L., 2003. Chlorine isotope fractionation during microbial perchlorate reduction. *Environmental Science and Technology* 37, 3859-3863.

Thiemens M. H., 1999. Mass independent isotope effects in planetary atmospheres and the early solar system. *Science* 283, 341-345.

ATTACHMENT 2

TECHNICAL MEMORANDUM: RICHARD HURST, Ph.D.

Hurst & Associates, Inc.

9 Faculty Court ~ Thousand Oaks, CA 91360-2934
Telephone: (805) 492-7764 ~ Facsimile: (805) 241-7149
www.hurstforensics.com

November 12, 2004
Technical Memorandum: NASA-JPL Perchlorate Plume Investigation

Objectives: Forensic Biogeochemical Component

This segment of the Scope of Work focuses on the use of naturally-occurring isotopes, integrated with other hydrogeochemical data to:

- delineate, as much as possible, the location of the leading edge of the perchlorate plume;
- assess the fate of the perchlorate plume, focusing especially on the potential transport of perchlorate down hydrologic gradient to the Sunset Reservoir; and
- discriminate NASA-JPL perchlorate from other potential sources of perchlorate in the Raymond Basin.

In order to accomplish these objectives, aqueous samples will be collected for biogeochemical analyses from: (1) ~ 10 groundwater monitoring wells, both on- and off-site; and (2) MWD Colorado River water. The analyses to be performed and their rationale are discussed in the subsequent section.

Analyses to be Performed to Achieve Objectives

Although the analyses described herein will be done in parallel, they are discussed in sequence from those that are more routinely performed in the course of groundwater investigations to those, such as isotopic ratio analyses, that are more specialized, being used in cases where discriminating among sources of contaminants is an issue.

General Groundwater Chemistry: Analyses of major cations and anions, pH, temperature, and potential contaminants of concern (perchlorate, nitrate) will be performed on the samples to be collected. These data will be compared and contrasted, using statistical evaluations, to each other and available historic groundwater chemical analyses of not only perchlorate-impacted groundwater, but also groundwater that has not been impacted by perchlorate (i.e., natural groundwater). The intent is to provide a geochemical framework that contributes to defining the characteristics of perchlorate-impacted groundwater from MWD Colorado River water and natural groundwater. It is clear that general groundwater chemistry, up to this point, has not successfully provided the level of resolution possible to achieve the objectives discussed above, however, detailed statistical analyses of larger data bases (current plus historic analyses), when integrated with isotopic analyses, have been shown to be very effective in investigations involving contaminant fate and transport (e.g. delineating plume boundaries, identifying potential sources of contamination).

Perchlorate Degradation (Chemical/Microbiological Indicators): Another factor that should be evaluated with regard to the fate and transport of perchlorate is the potential for perchlorate to degrade as the result of reduction reactions (i.e., oxygen deficient) and/or the presence of perchlorate-reducing microorganisms in an aquifer. In order to assess the potential for perchlorate degradation in the aquifers involved, the following analyses will be performed:

- dissolved oxygen and oxidation – reduction potential (DO and ORP, respectively)
- oxidation – reduction pairs (e.g., nitrite/nitrate, ferrous/ferric, sulfite/sulfate)
- dissolved and total organic carbon (DOC and TOC, respectively)
- microbial assays

The first three analyses evaluate either directly or indirectly, relative abundances of oxygen; higher abundances of oxygen stabilize perchlorate ions, thereby inhibiting its degradation via reduction. The fourth analysis, microbial assays, is important given the presence or absence of perchlorate-reducing microorganisms (e.g., *Dechlorosoma suillum)* influences the overall fate of perchlorate in groundwater systems. Evaluation of these factors is important, not only in the short term, but also in the long term, to the fate of perchlorate in groundwater systems within the Raymond Basin.

Tritium: Tritium, a radioactive isotope of the element hydrogen, provides information about the age of groundwater (i.e., time since groundwater has been out of contact with the atmosphere) and hence, contributes to characterizing groundwaters. Specifically, high precision tritium analyses (to 0.1 TU, tritium units) can assist in constraining whether or not perchlorate contamination is recent, old, or a mixture of old-new sources.

Stable Isotope Analyses: Both oxygen/hydrogen ($\delta^{18}O$ and δD, respectively) and strontium ($^{87}Sr/^{86}Sr$) isotope analyses will be performed on each aqueous sample collected for the purpose of:

- characterizing the isotopic characteristics of each water;
- assessing the fate/transport of perchlorate and delineating the plume (e.g., leading edge);
- discriminating the NASA-JPL perchlorate source from other potential sources of perchlorate and/or fingerprinting NASA-JPL perchlorate;
- assessing if NASA-JPL derived perchlorate is contributing to perchlorate contamination at the Sunset Reservoir; and
- modeling the relative contribution of NASA-JPL perchlorate to groundwater resources in the Raymond Basin (if multiple perchlorate sources are determined to be present).

The advantage of stable isotope analyses resides in the higher precision and accuracy possible when compared to those achievable via general groundwater chemistry ($<< 0.01\%$ versus $> 1\text{-}10\%$ respectively). Hence, important variations in groundwater chemistry pertinent to perchlorate source identification and tracing the migration of perchlorate that may escape the scrutiny of general groundwater chemical analyses are far more discernible via isotopic analyses. It is also possible, using isotope geochemistry mixing models, to assess contributions of perchlorate from each source to groundwater in cases where more than one source of contamination is present.

Cumulative Data Integration

Lastly, it should be emphasized that potential covariations and groupings will be statistically evaluated utilizing the entire data set in order to define the biogeochemical characteristics of the NASA-JPL perchlorate sources in order to trace their migration and discriminate them from other sources of perchlorate, as well as natural, unimpacted groundwater.

Furthermore, these data can also be used to help constrain other modeling (e.g. hydrogeological flow models) that bear significantly on the fate/transport of perchlorate in the region.

Although each data set (e.g., general groundwater chemistry, tritium, stable isotopes, etc.) leads to independent conclusions, statistically significant covariations and groupings of independent data populations provide valuable information pertinent to achieving objectives that would be otherwise overlooked. Hence, for groundwaters collected during this sample round, and, if necessary, future sampling rounds in which the analyses discussed herein are performed, data sets will be interpreted both independently and cumulatively in order to achieve, to the highest degree possible, the stated objectives.

General Sampling Protocols

All sampling (general water chemistry, DO, ORP, DOC, TOC, microbial assays) will follow established regulatory protocols including Chain of Custody procedures. In the case of samples collected for isotope analyses, Chain of Custody procedures will be followed; in samples where a preservative (e.g. acid) may extract an element/isotope of interest from suspended particulate matter, preservatives will not be added. Samples will be filtered, preferably in an ultraclean laboratory environment, in order to remove particulates.

With regard to sampling for isotopes, it is best to keep the protocols as uniform as possible to avoid problems that may be encountered by those charged with field sampling. In general, all samples for isotope analyses should be collected in airtight, precleaned glass containers which should be filled to the rim to avoid aqueous-air exchange; splits should be taken for each isotope to be analyzed. Specific details will be provided and discussed with field technicians prior to sampling. Typical aqueous sample volumes required are as follows:

Hydrogen/Oxygen/Strontium	40-50 ml
Tritium	~ 1 L

ATTACHMENT 3

LABORATORY PROCEDURES

3A: PERCHLORATE ISOTOPE ANALYSIS

Environmental Isotope Geochemistry Laboratory
University of Illinois at Chicago (UIC)
Contact: Leslie Patterson at (312) 413-0098, e-mail lpatte2@uic.edu

Perchlorate is adsorbed from groundwater onto a highly perchlorate-selective bifunctional anion exchange resin (Purolite A530E). Up to 100,000 bed volumes of groundwater can be passed through this resin before perchlorate breakthrough is observed (Gu et al., 2000). In the laboratory, the perchlorate is desorbed from the resin using a $FeCl_3$-HCl solution (Gu et al., 2001), purified by ion exchange chromatography, and concentrated by evaporation and precipitated as a pure alkali perchlorate salt (Bao and Gu, 2004). Recovery of perchlorate at each step is monitored by ion chromatography measurements. The recovered perchlorate salt is decomposed in vacuo for analysis of Cl and O isotope ratios. Oxygen gas is purified for isotope ratio analysis of oxygen (including both $^{18}O/^{16}O$ and $^{17}O/^{16}O$). Alkali chloride residue from perchlorate combustion is converted to AgCl and analyzed for Cl isotope ratio according to the inorganic chloride method summarized in Section 3F of this Attachment. Conversion yields are monitored by capacitance manometry and are near quantitative. In addition, O isotopic analyses will be performed on CO produced quantitatively by reaction of perchlorate with carbon at 1350°C, with procedures and calibrations as reported in Bohlke et al. (2003). Isotope ratios are measured by gas-source isotope ratio mass spectrometer using reference gases calibrated against standard isotopic reference materials. The standard isotopic reference materials against which all chlorine and oxygen isotope data are normalized are SMOC (Standard Mean Ocean Chloride; Godon et al., 2004) and V-SMOW (Vienna Standard Mean Ocean Water; Coplen, 1996). Precision of perchlorate Cl and O isotope ratios determined by this method is better than ±0.3‰.

Bao, H. and Gu, B. 2004. *Environ. Sci. Technol.* 38, 5073.
Bohlke, J. K., Mroczkowski, S. J., Coplen, T. B., 2003. *Rapid Comm. Mass Spectrom*. 17, 1835.
Coplen, T.B., 1996. *Geochim. Cosmochim. Acta* 60, 3359.
Godon, A. et al., 2004. *Chem. Geol.* 2004, 207, 1.
Gu, B., Brown, G. M., Alexandratos, S. D., Ober, R., Dale, J. A.,
Plant, S., 2000. In *Perchlorate in the Environment*. Urbansky, E. T., Ed., Kluwer/Plenum, New York, p. 165.
Gu, B, Brown, G.M., Maya, L., Lance, M.J., Moyer, B.A., 2001. *Environ. Sci. Technol*. 35, 3363.

3B: OXYGEN ISOTOPE ANALYSIS IN GROUNDWATER

Equilibrating Water Samples for $\delta^{18}O$ Analysis

I. This SOP is to explain the procedure for preparing water samples by the equilibration technique for analysis of $\delta^{18}O$ on a ThermoFinnigan Delta Plus XP using a Gas Bench II peripheral unit equipped with a GC-Pal autosampler.

II. Equipment

A. Exetainer tubes with caps
B. 0.3% CO_2 in Helium
C. 0.5mL Pipette
D. Pipette tips
E. Internally calibrated water standards and/or VSMOW, GISP and SLAP
F. Sample/flush needle from the Gas Bench
G. Gas Bench II
H. Delta Plus XP
I. Isodat v1.5 Software (Service Pack v1.8)
J. ThermoFinnigan Delta Plus XL
K. Timer

III. Procedure

A. Label the exetainers with the sample ID's and prepare exetainers for the standards at the beginning, middle and end of the run. Also prepare exetainers for one of the standards to be analyzed every eight samples.
B. Pipette out 0.5ml of each standard and sample into the appropriate exetainer and close tightly. The septa should have a pucker when the seal is good.
C. Attach a sample/flush needle using a Swagelok fitting by the stainless steel line to the regulator on the 0.3% CO_2 in He tank.
D. Put the needle into an empty exetainer, turn on the tank and measure the flow out of the capillary line. It should be set to 40mls/min.
E. After the flow rate is set, use the needle to flush all the standards and samples. Start with the first standard and push the needle as far as it will go into the exetainer through the septa. Allow it to flush for 1 minute and move it to the next vial by holding onto the metal knurled-knob to avoid breaking the capillary line. To ensure consistency a timer is used here.
F. When all the samples and standards are flushed, push the needle into an empty exetainer for safety and turn off the 0.3% CO_2 in He tank.
G. The samples are then left to equilibrate at 25°C for 48 hours.
H. The samples and standards are then analyzed using a run that has three standard gas injections followed by seven sample gas measurements.

IV. References

A. Nelson, Stephen T. Rapid Commun. Mass Spectrom. 2000;14:1044-1046.

B. Nelson, Stephen T. Rapid Commun. Mass Spectrom. 2000;14:93-297
C. Coplen, Tyler B., Wildman, Joe D. and Chen, Julie Anal. Chem. 1991;63:910-912

3C: HYDROGEN ISOTOPE ANALYSIS

Equilibrating Water Samples for δD Analysis*

***Alternate method to be implemented starting 02/05:**
Direct injection of water samples into TC/EA, pyrolysis decomposition to CO and H_2 using a glassy carbon reactor at 1400 °C. H_2 gas analyzed using ConFlo III interface to Delta Plus XL; SOP in progress.

I. This SOP is to explain the procedure for preparing water samples by the equilibration technique for analysis of δD on a ThermoFinnigan Delta Plus XP using a Gas Bench II peripheral unit equipped with a GC-Pal autosampler.

II. Equipment

A. Exetainer tubes with caps
B. 2.0% H_2 in Helium
C. 0.5mL Pipette
D. Pipette tips
E. Internally calibrated water standards and/or VSMOW, GISP and SLAP
F. Sample/flush needle from the Gas Bench
G. Gas Bench II
H. Delta Plus XP
I. Isodat v1.5 Software (Service Pack v1.8)
J. ThermoFinnigan Delta Plus XP
K. Timer
L. Platinum catalyst rods
M. Drying oven
N. Forceps

III. Procedure

A. Label the exetainers with the sample ID's and prepare exetainers for the standards at the beginning, middle and end of the run. Also prepare exetainers for one of the standards to be analyzed every eight samples.
B. Pipette out 0.5ml of each standard and sample into the appropriate exetainer and close.
C. The platinum rods are stored in a 60 degrees C oven in between runs in cell wells to keep them apart. Remove the rods from the oven and let them sit for 5 minutes before they are needed.
D. Using forceps drop one rod into each vial and close tightly. The septa should be puckered when the seal is good.
E. Attach a sample/flush needle using a Swagelok fitting by the stainless steel line to the regulator on the 2.0% H_2 in He tank.
F. Put the needle into an empty exetainer, turn on the tank and measure the flow out of the capillary line. It should be set to 90mls/min.
G. After the flow rate is set, use the needle to flush all the standards and samples. Start with the first standard and push the needle as far as it will go into the

exetainer through the septa. Allow it to flush for 3 minute and move it to the next vial by holding onto the metal knurled-knob to avoid breaking the capillary line. To ensure consistency between samples a timer is used here.

H. When all the samples and standards are flushed, push the needle into an empty exetainer for safety and turn off the 2.0% H_2 in He tank.

I. The samples are then left to equilibrate in the heated block on the Gas Bench for 16 hours at 22 degrees C. Since the samples are going to equilibrate in the Gas Bench II, you will need to create the sequence in ISODAT before loading them so you don't have to open the top of the Gas Bench II after loading the samples.

J. The samples and standards are then analyzed using a run that has three standard gas injections followed by seven sample gas measurements.

IV. References

A. Nelson, Stephen T. Rapid Commun. Mass Spectrom. 2000;14:1044-1046.

B. Nelson, Stephen T. Rapid Commun. Mass Spectrom. 2000;14:93-297

C. Coplen, Tyler B., Wildman, Joe D. and Chen, Julie Anal. Chem. 1991;63:910-912

3D: TRITIUM-HELIUM ISOTOPE ANALYSIS

Mass spectrometric measurement of helium isotopes and tritium in water samples

Andrea Ludin[1], Ralf Weppernig[1], Gerhard Bönisch[1], and Peter Schlosser[1,2]

[1]Lamont-Doherty Earth Observatory of Columbia University

Route 9W

Palisades, NY 10964

[2]Department of Earth and Environmental Sciences

Columbia University

New York, NY 10027

Introduction

Tritium, together and its radioactive decay product ^{3}He are among the most frequently measured transient tracers applied to studies of the ocean. Tritium measurements of oceanographic water samples started in the 1950s (e.g., Begemann and Libby, 1957), whereas the application of ^{3}He was added in the late 1960s as part of the preparation for the GEOSECS program (e.g., Clarke et al., 1969). Most of the early oceanographic tritium measurements were based on radiometric methods. In order to achieve the sensitivity and precision needed for oceanographic studies, the radiometric measurement has to be preceded by electrolytic and/or thermodiffusive enrichment by factors of the order of 100. Overall precisions of radiometric tritium measurements using enrichment are in the range of ñ 2.5 to ñ 5 % with detection limits of 0.05 to 0.08 TU (e.g., Weiss et al., 1976; ™ stlund and Grall, 1987; one TU means a tritium to hydrogen ratio of 10^{-18}). These precisions and detection limits provided sufficient resolution of the oceanographic tritium distributions observed during the 1960s and 1970s. However, tritium decay and mixing led to decreased tritium concentrations in the ocean, especially in the southern hemisphere, where surface concentrations hardly exceeded one TU during the peak time (compared to about 17 TU in he northern hemisphere) preventing the use of radiometric tritium measurements to delineate the oceanic tritium distributions at high resolution.

This problem was overcome by the development of mass spectrometric methods for measurement of tritium by the ^{3}He ingrowth method (e.g., Clarke et al., 1976; Jenkins et al, 1979; Lynch and Kay, 1981; Bayer et al., 1989; Jenkins et al., 1991). By using the ^{3}He ingrowth method for measurement of tritium, precision could be improved to ñ 1 to ñ 2 % and the detection limit to about 0.005 TU. Whereas early mass spectrometric tritium and helium isotope measurements were performed on dedicated mass spectrometers typically developed in specialized physics departments (e.g., Clarke et al., 1976), the more recently installed systems mainly use commercially available mass spectrometers in combination with specially designed sample purification and inlet systems (e.g., Bayer et al., 1989). This contribution describes two state of the art systems for measurement of helium isotopes and tritium by the ^{3}He ingrowth method installed and operated at the Lamont-Doherty Earth Observatory (L-DEO). The description includes the design and setup of the systems, as well as their performance during routine measurements. The principal features of the mass spectrometric systems operated in the L-DEO laboratory, as well as the measurement procedures, are similar to those applied in most of the other tritium/helium laboratories actively involved in oceanic tracer studies. In the case of the L-DEO laboratory, tritium and helium isotopes are measured on separate, dedicated mass spectrometric systems to increase throughput and efficiency. However, each system can be used for both helium isotope and tritium measurements.

General system design

Measurement of helium isotopes, as well as tritium by the ^{3}He ingrowth method, in water samples require several steps that determine the design of the mass spectrometric systems used for such measurements.

(1) Water samples for measurement of helium isotopes, neon and tritium are drawn at sea from Niskin bottles. Theycan either be stored in copper tubes for shore based gas extraction or be processed at sea. For high precision tritium measurements water samples are collected in 1 liter glass bottles. Detailed descriptions of laboratory-based gas extraction systems can be found in Bayer et al. (1989) or Jenkins et al. (1991). Additionally, we briefly describe the design of the L-DEO laboratory-based gas extraction systems in chapter 3 of this contribution.

(2) The gases extracted from the water samples using either seagiong or laboratory-based extraction systems are stored in flame-sealed glass ampoules to minimize addition of helium to the sample during the storage time. ^{3}He-free ater for tritium measurement is stored in flame-sealed glass bulbs (volume: 200 cm^3 or 1 l). Although there is some permeation of helium from glass into the water samples during storage, low-permeability glass is the best material for this purpose because stainless steel containers would be expensive and need valves which always have a certain leak rate. The use of glass bulbs and ampoules requires a design of the gas extraction and sample inlet systems that minimizes the use of O-ring fittings for metal-glass transitions To further decrease the helium addition from the glass, the samples are stored at -30°C during the ^{3}He ingrowth period.

(3) Although commercially available mass spectrometers can be used, attention has to be paid to certain design features, especially with respect to the ion source and the detection of ^{3}He. The ion source has to be stable and at the same time yield a high ion current. The best ^{3}He detection mode seems to be the utilization of a channeltron connected to a fast ion counting system.

(4) Fully automated measurement is an absolute necessity for high sample throughput, as well as high precision of the measurements. Therefore, the hardware has to be designed in a way that allows effective computer control of all essential components of the system (mass spectrometer plus inlet system). The system control software is too complex for inclusion into this contribution. It is described in a separate contribution by Zaucker et al. (1996).

Gas extraction

Helium isotope samples

Before the mass spectrometric measurement of helium isotopes of water samples, the dissolved gases have to be extracted quantitatively from the water sample and stored in flame sealed glass ampoules. For this purpose, a vacuum extraction system with the capacity for simultaneous handling eight samples is used (for schematic view, see Fig. 1).

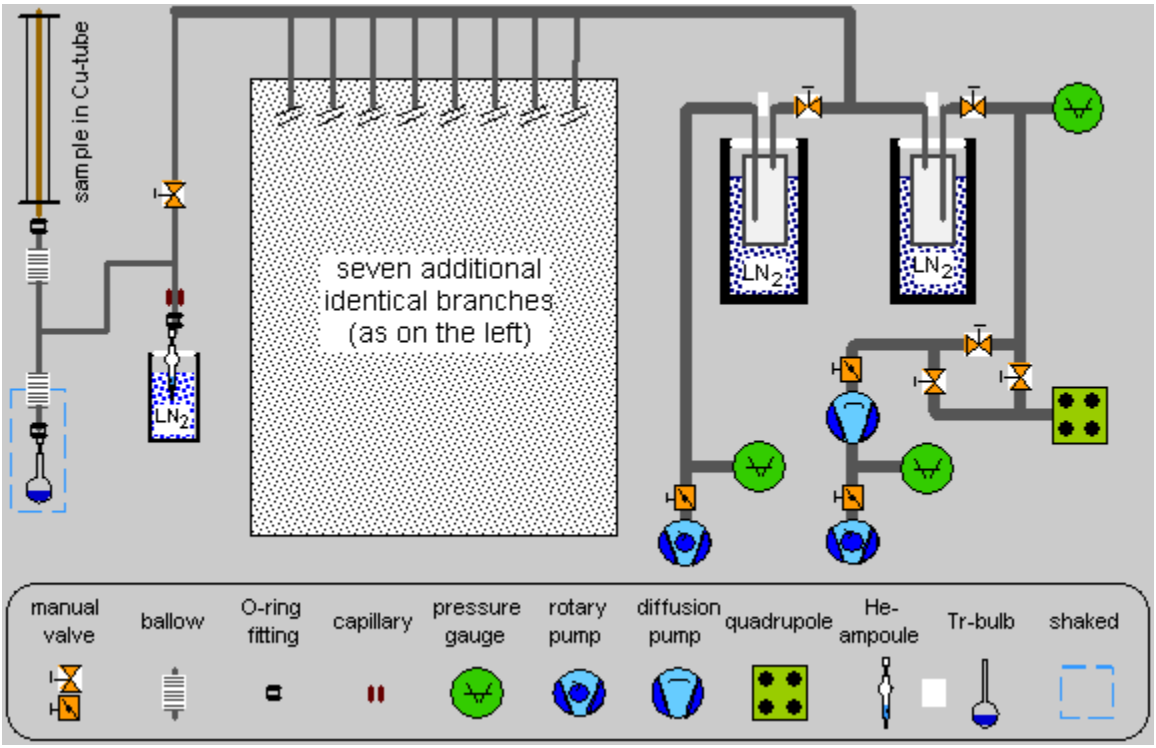

Fig. 1: Schematic diagram of the helium extraction system

The portion of the extraction system operated in a static vacuum mode during gas extraction is an all-metal design except for three Viton® O-rings used to attach the sample container (copper tube), the glass ampoule (filled with 1 g of activated charcoal), and a 200 ml glass bulb to the system. The rough vacuum is produced by a rotary pump protected from the water vapour in the system by a liquid nitrogen cooled all-metal water trap. To pump the system down to about 10^{-6} mbar, a combination of a rotary and a diffusion pump is used. Additionally, the vacuum system is equipped with a quadrupole mass spectrometer (QPMS) for leak detection.

After establishing high vacuum, each branch of the extraction system is separated from the vacuum pumps by a stainless steel valve. In a static vacuum mode, the pinch-off clamps of the copper tubes are opened and the water is released into the glass bulb. During expansion of the water into the bulb, most of the dissolved gases are transferred to the gas phase. To enhance the removal of the remaining gases from the water phase, the glass bulbs are shaken mechanically to produce turbulence in the molecular boundary layer of the water contained in the glass bulbs. The extracted gases are transported by water vapour into the glass ampoule which at this time is cooled by liquid nitrogen, thus maintaining a strong pressure gradient and a related water vapour flow. The water vapour flow is controlled by a capillary mounted above the O-ring connection used to attach the glass ampoule to the system. In the glass ampoule, the water vapour is frozen out and all gases except for neon and helium are adsorbed on the

activated charcoal. Helium and neon are trapped dynamically by the high velocityof water vapour through a ‘glass capillary’ used for flame-sealing the ampoule. Diffusion of helium against the strong water vapour advection in this glass capillary is negligible. After about 30 minutes, the gas transfer is complete and the glass ampoule is flame-sealed. A leak check is performed to ensure the quality of the samples by checking the pressure increase in the system after opening the vacuum valve connecting the specific sample branches to the main vacuum system. The preparation of the system and the extraction of eight samples requires about 4 hours.

The extraction efficiency of this system is about 99.9 % or higher (Bayer et al., 1989). Diffusion of helium through 3 O-rings over a period of about 30 minutes adds a blank of roughly 4×10^{-9} cm^3 STP ^4He or about 0.2 % of the He amount of a sample. The water in the glass bulb can be flame-sealed for ^3He ingrowth from tritium decay. Before flame-sealing of the bulbs, the vacuum valve connecting the individual branches to the main pumping line is opened for a period of about 3 minutes to ensure complete removal of ^3He.

Tritium samples

Water samples for measurement of tritium are either flame-sealed after the helium extraction (small-volume samples, used for tritium concentrations between 0.2 to 10 TU; see above) or prepared for ^3He ingrowth using a separate system (large volume samples, used for tritium concentrations below 0.2 TU: see Fig. 2). This system is capable of handling samples with a volume of about 500 cm^3 compared to the 40 cm^3 used for small volume samples. It consists of 4 identical branches and a simple vacuum system (rotary pump plus all-metal water trap). The samples (typically one liter glass bottles) are attached to the extraction system after a pressure of about 10^{-3} mbar has been achieved. About 400 to 500 grams of water are transferred through a capillary into one liter bulbs fabricated from special glass with low He permeability (GW or Corning; e.g., Suckow et al., 1990). After completion of the water transfer, the water samples are shaken to enhance the gas transfer from the water into the gas phase. All extracted gases are pumped away by the rotary pump. Loss of water is reduced by a capillary mounted into the vacuum line. The partial pressure of helium in the glass bulbs is lower than that in the vacuum lines because water vapor constantly flushes the helium extracted from the water out of the bulbs through a glass capillary used for flame-sealing of the bulbs after the extraction is completed. Typically, an extraction efficiency of at least 99.95 % is achieved for small bulbs (the gas extraction effieciency for large bulbs is approximately 99.995 %). Diffusion of helium through the O-ring connecting the glass bulb to the vacuum system is negligible.

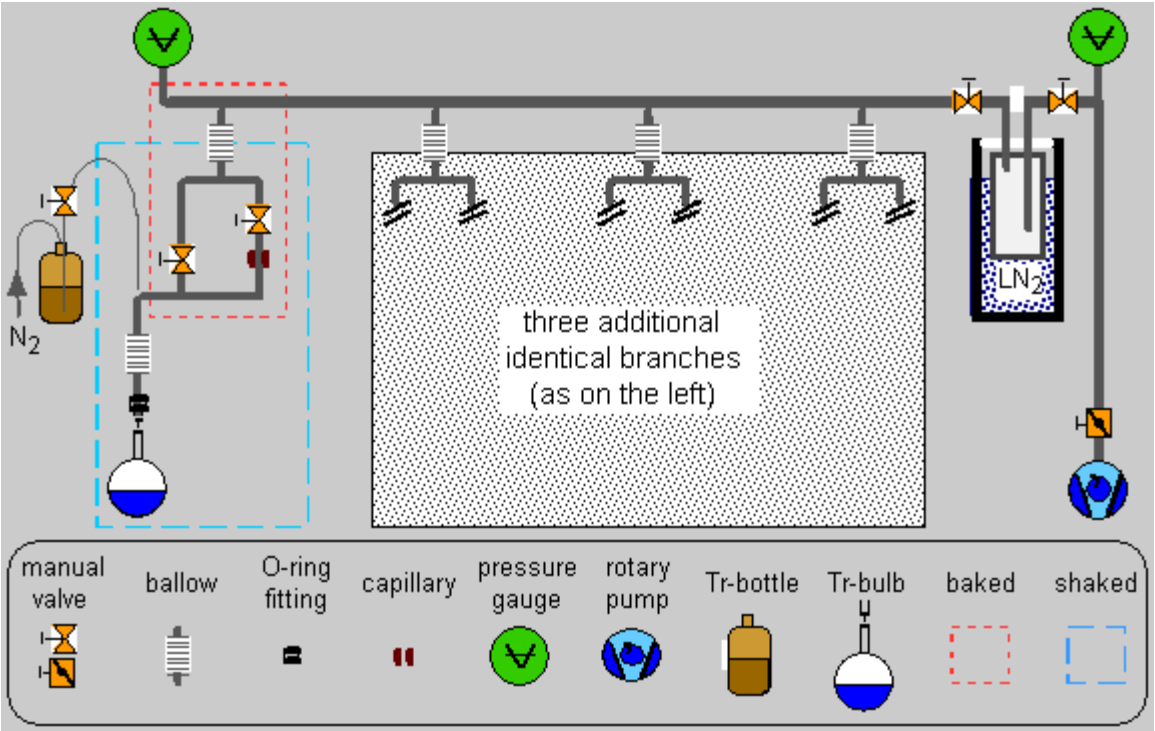

Fig. 2: Schematic diagram of the tritium extraction system.

Viton® is a registered trademark of DuPont Dow Elastomers

Inlet System

General Design

The "inlet" or sample preparation system is designed to produce pure helium and neon fractions from the gas mixtures extracted from the water samples and stored in the glass ampoules. It is optimized for fully automated operation and high sample throughput. It consists of three main parts (Fig. 3):

a manifold of eight vacuum and cracking valves for attachment of the glass ampoules to a high-vacuum system and cracking of the glass seals to admit the gas samples into the purification part of the inlet system,

an air standard preparation system, and

three traps cryogenically cooled by a helium compressor for separation of helium and neon from water vapour and permanent gases.

The inlet system also contains a QPMS for measurement of neon.

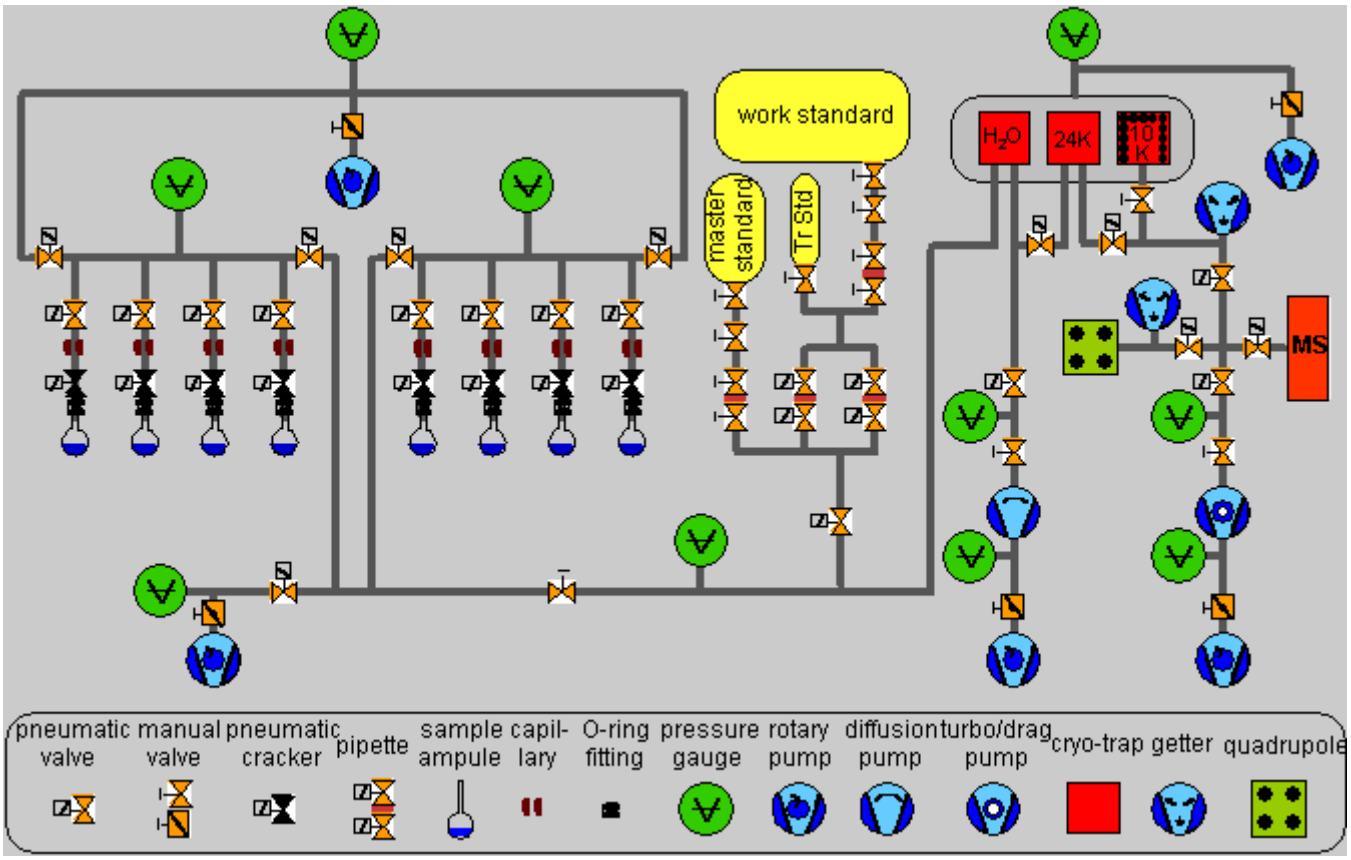

Fig. 3: Schematic diagram of the sample preparation system.

Vacuum system

The vacuum system consists of electropolished stainless steal tubing (1/4" or 3/8" outer diameter) with all-metal fittings (mostly VCR). The 3/8" tubing is used in the sample inlet and air standardization parts for more efficient pumping, whereas 1/4" tubing is used in the cryogenic cold trap part of the system to minimize the volume (the ratio of the trap volume to

the mass spectrometer volume determines the fraction of the helium that is admitted to the mass spectrometer).

We used all-metal valves and vacuum fittings wherever possible to minimize the helium background in the system. The only parts that contain material other than stainless steel are the O-ring fittings in the system that are used to attach the glass ampoules to the all-metal inlet system (Cajon Ultra Torr). The all-metal fittings are well suited for relatively high bakeout temperatures of the vacuum lines and keep the helium background levels low. The Pirani and Penning pressure gauges are also all-metal designs and are attached to the vacuum lines through CF flanges (16 and 40 mm for the Pirani and Penning gauges, respectively). The valves are equipped with copper stamps (Nupro SS-4BG-V51-CU3C). Most of the valves are pneumatically driven, allowing for fast manual or computer-controlled valve operation. We use normally closed valves to secure the system in case of power or compressed air loss.

Rough vacuum (ó 10^{-3} mbar) is produced by rotary pumps (Leybold, Trivac D4B). Oil filters (Edwards, activated alumina) prevent back-flow of oil vapour from the rotary pumps in case of a pump failure. A diffusion pump (Balzers, DIF 063) backed up by a rotary pump achieves a finer vacuum (ó 10^{-5} mbar). The diffusion pump is protected from the water vapour by a water trap (see below). The ultra-high vacuum section, which consists of the 10 K charcoal trap and the QPMS (Balzers, Prisma or QMG 112 with Faraday cup), is pumped by a turbomolecular/drag pump (Balazers, TMU 065) or by a combination of a diffusion pump (Balzers, DIF 063) and a turbomolecular pump (Balzers, TPU 60). Either combination is backed by a rotary pump.

The pressures of the five rotary pumps are monitored by Pirani pressure gauges (Balzers, TPR 250). In the all-metal section, three all-metal Piranis (Balzers, TPR 260) are used. The vacuum of the diffusion and turbo/drag pumps is controlled by two Penning pressure gauges (Balzers, IKR 260). The pressure readings of the ten gauges are displayed by five dual controllers (Balzers, TPG 252). They are also monitored by the system control computer.

Sample Inlet

To open the flame-sealed glass ampoules and bulbs for gas transfer into the inlet system, we use modified Nupro SS-8BK-TW-10 valves (normally open, pneumatcilly dirven). The modification of the valves includes drilling open the inlet port of the valve to accommodate the glass neck of the ampoules next to the modified stamps (stamps have been replaced by stainless-steel screws). Before cracking the glass ampoules or bulbs by closing the cracking valves, the inlet system is evacuated in two steps by a rotary and a diffusion pump to decrease the partial pressure of helium to a negligible level.

During the extraction procedure, water vapour is used as carrier gas to transport the gases released from the water samples into the glass ampoules. This water is utilized to flush the gases contained in the glass ampoules into the inlet system. More than 99 % of the He is in the gas phase of the head space of the ampoules or bulbs. A capillary mounted just above the cracking valves (Fig. 4; inner diameter: 0.069 cm, length: ÷ 2.5 cm) prevents back-diffusion of helium into the glass container and reduces the amount of water transferred into the inlet system. The transfer times through the capillary are set to 1 minute for helium isotope samples, 2.5 minutes for 40 cm^3 tritium samples, and 5 minutes for 400 cm^3 tritium samples, respectively. These transfer times are checked by repeat measurements to ensure complete transfer of the sample gas from the glass ampoules or bulbs into the inlet system.

Air standards

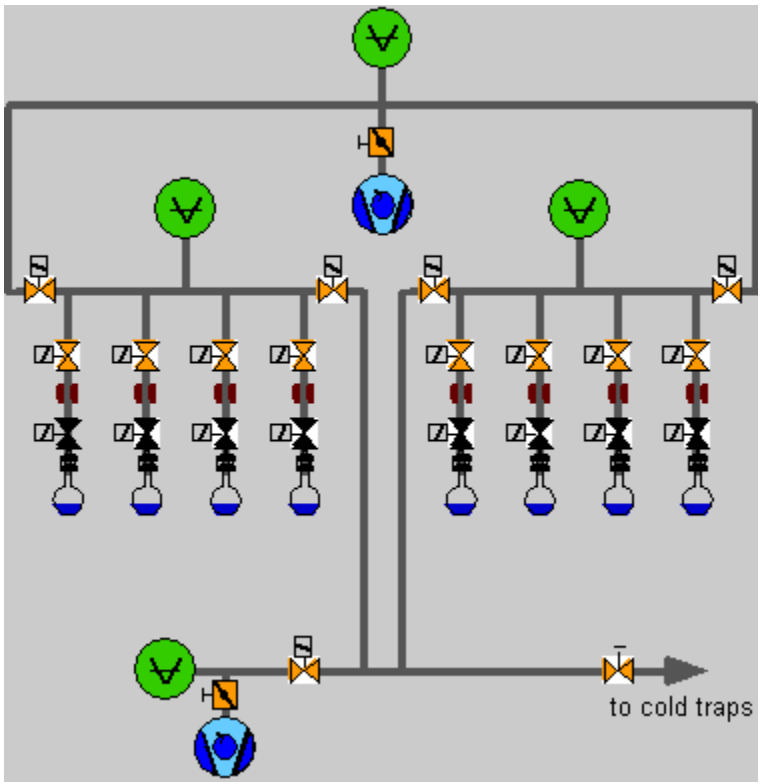

Fig. 4: Schematic diagram of inlet part of sample preparation system (for symbol legend, see Fig. 3).

The helium isotope ratio measurements, as well as the absolute ^{3}He , ^{4}He , and neon measurements are standardized against air. The He content of air (5.24 ppm; Glueckauf, 1946), as well as its $^{3}He/^{4}He$ ratio (1.384×10^{-6}; Clarke et al., 1976) and He/Ne ratio (0.288, Ozima et al., 1983) are well known. Therefore, atmospheric air is well suited as a standard for helium isotope measurements. As working standard, we use a stainless steel container with known volume (13 l) filled with atmospheric air (Fig. 5). The container is filled sufficiently far away from laboratory buildings to avoid contamination with tank He. For precise determination of the amount of helium contained in the air standard, atmospheric pressure, temperature, and humidity have to be measured accurately. Determination of the helium content in the standard container with a precision of ñ 1 ‰ requires measurement precisions of ñ 1 mbar, ñ 0.3 K and ñ 2 % for atmospheric pressure, temperature, and relative humidity, respectively.

Besides the working standard, we use a master standard (3.9 l) to calibrate the individual working standards which are changed after a depletion of about 10 percent (Fig. 5). For tritium measurement by the ^{3}He ingrowth method, very small amounts of helium are used for standardization. Therefore, the air standards are diluted in an expansion volume (volume of about 1 l) by a factor of about 160 (Fig. 5)

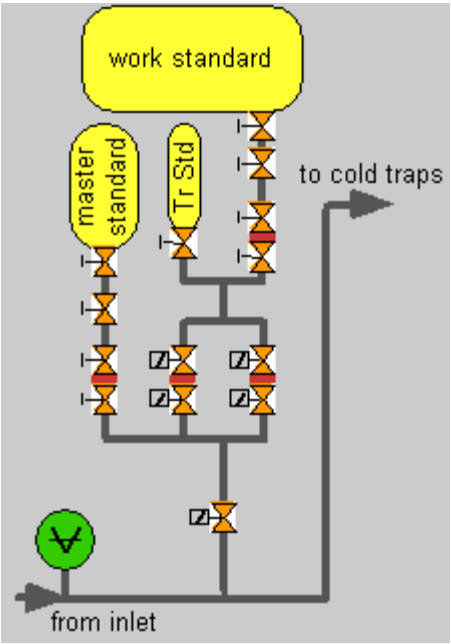

Fig. 5: Schematic diagram of the standardization part of the sample preparation system (for symbol legend, see Fig. 3).

The individual air standards are taken from the standard containers by pipettes, which consist of calibrated volumes mounted between two Nupro valves. The pneumatically operated (automatic) pipettes (custom-made by D. Doerflinger, Heidelberg, Germany) are equipped with counters mounted into the pneumatic air lines to account for the depletion of the standard. The depletion has to be known for correction of the absolute amount of helium contained in the volume of one air standard taken by a pipette. The air standards are treated in the same way as the extracted gases from water samples.

Cryogenic cold traps

Three different traps (custom-made by Leybold and Janis Research Co. for the helium isotope and tritium mass spectrometers, respectively) are cooled by two cryogenic pumps (Leybold, RGD 510, with compressor, Leybold, RW4200, for cool down times of traps see Fig. 6). They are used to separate helium and neon from all other gases contained in a water sample or air standard (Fig. 7). All traps are housed in a protection vacuum maintained by a rotary pump for proper thermal insulation and to avoid water vapour condensation on the cold surfaces. Their temperatures are measured by silicon diodes and set by several controllers (2 Leybold LTC 60 in the helium isotope system, and 4 Lakeshore, Temperature Controller 330 in the tritium system, respectively). The temperatures are stable within about ñ 0.1 K or better.

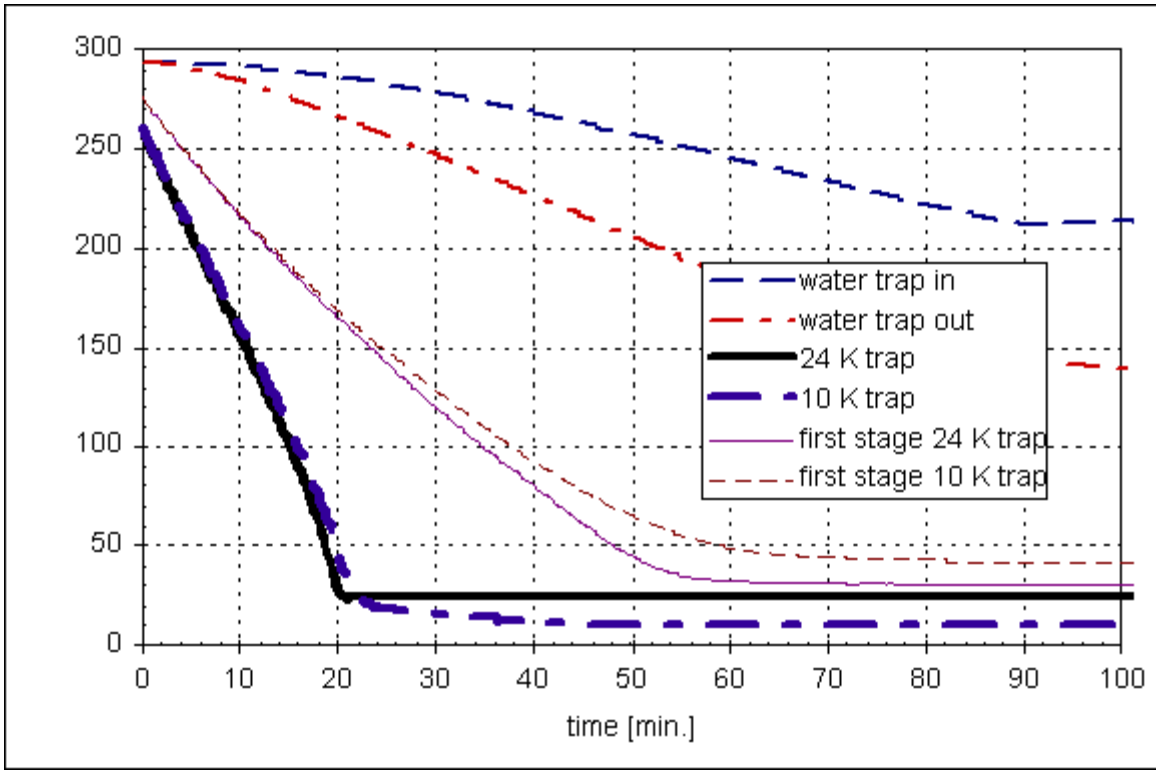

Fig. 6: Cool down times for the cryogenic cold traps.

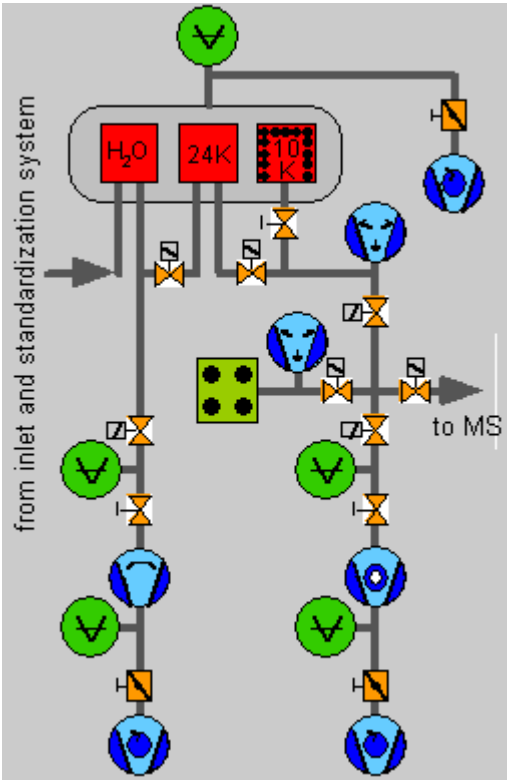

Fig. 7: Schematic diagram of the cryogenic cold trap system (for symbol legend, see Fig. 3)

The first trap (stainless steel cylinder; 2.5 cm diameter, 10 cm length, 40 cm^3 volume) is connected by copper wires to the first stage of one of the cryogenic pumps. Two silicon diodes and heaters are stabilizing the temperatures at 253 K at the trap inlet and 123 K at the trap outlet to distribute the freeze-out of the water over the entire length of the trap. An additional

temperature controller keeps the inlet line before the water trap above the freezing point of water to avoid any freezing and clogging.

The second trap (stainless steel cylinder of 2.3 cm diameter, 2.0 cm length, about 4 cm^3 volume) mounted directly onto the second stage of one cryogenic pump with a stabilized temperature of 24 K liquefies all gases except helium and neon. About 5 minutes are required for removal of the water vapour and condensation of the permanent gases.

The inner surface of the final cold trap (cylinder of 2.3 cm diameter, 2.0 cm length, about 4 cm^3 volume) are covered with charcoal (DESOREX, F11) by using a cold-temperature epoxy glue for good thermal contact. The adsorption coefficient of gases on the activated charcoal is a function of the partial pressure in the cold trap, the volume of the trap, the amount and type of activated charcoal, and the temperature of the trap. The adsorption and desorption of helium (and neon) onto and from the charcoal can be measured directly by using the sector field mass spectrometer (SFMS). The same holds true for neon if the QPMS is used. Quantitative (> 99.5 percent) adsorption of helium on the charcoal requires temperatures below 14 K. Quantitative desorption is achieved at temperatures of ò 45 K (Fig. 8; tritium mass spectrometer ò 38 K). The small ^{3}He to ^{4}He isotope fractionation effect (Fig. 8) is negligible at temperatures < 14 K and > 45 K.

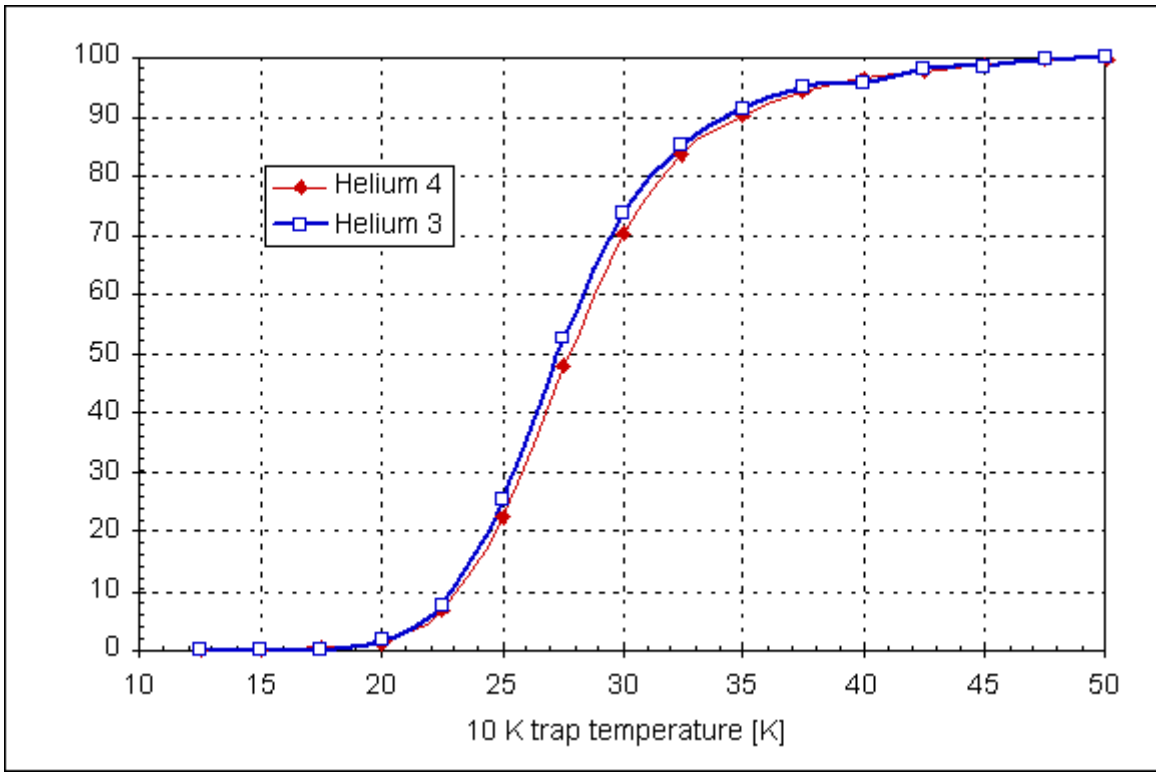

Fig. 8: 3He and 4He adsorption isotherms (measured on the helium isotope SFMS).

We determined the absorption of helium and neon onto the charcoal as a function of time using the QPMS. For this purpose, both helium and neon were adsorbed quantitatively onto the charcoal at 10 K. This process took about 2.2 minutes for helium. The following desorption of helium to >99 percent of the original signal (at 45 K) required about 1.5 minutes (Fig. 9). The equivalent numbers for neon are about 4.5 and 7 minutes (120 K), respectively.

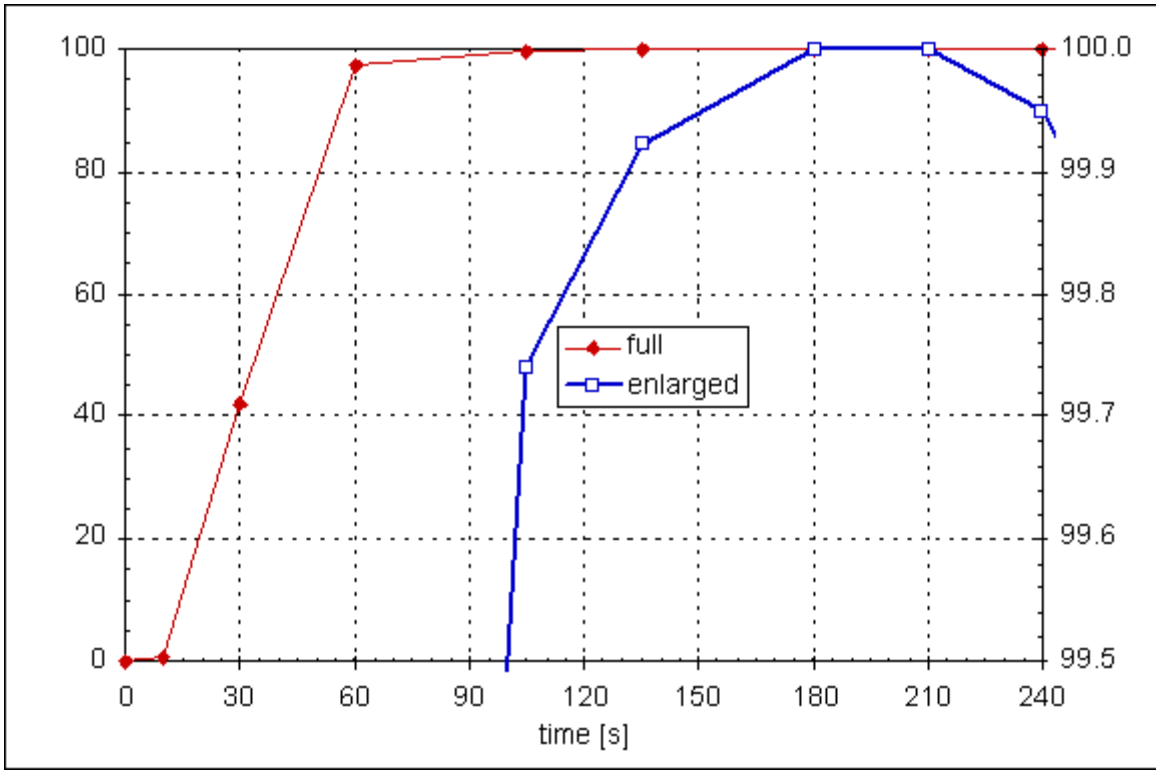

Fig. 9: Desorption time of 4He from the charcoal for a temperature of 45 K (measured on the Tritium mass spectrometer).

There is discrimination of helium by neon in the QPMS (Balzers Prisma). At the helium inlet temperature of 38 K (tritium mass spectrometer), less than 0.5 % of the neon is in the gas phase (Fig. 10a). With the full neon signal in the QPMS (120 K), the helium signal is reduced by about 50 % (Fig. 10a). In the SFMS, the discrimination for a 0.2 cc air standard at 120 K is about 20 % (Fig. 10b).

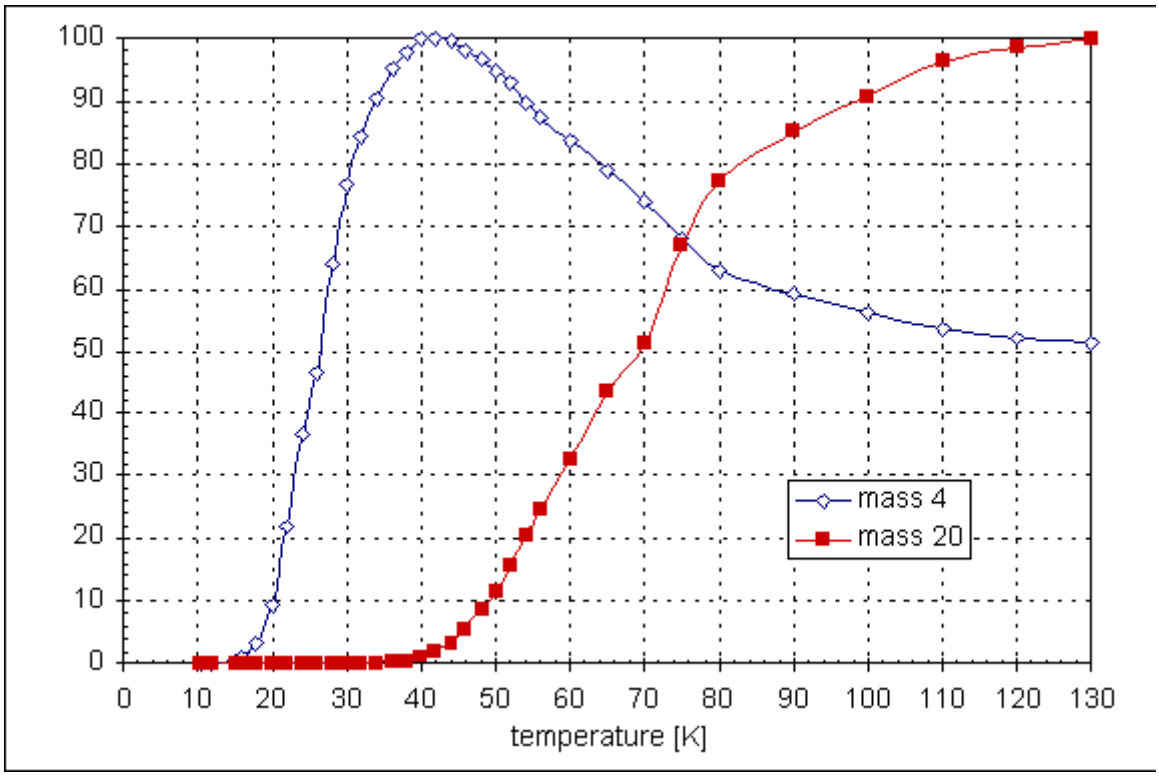

Fig. 10a: 4He discrimination by neon in the Prisma quadrupole mass spectrometer.

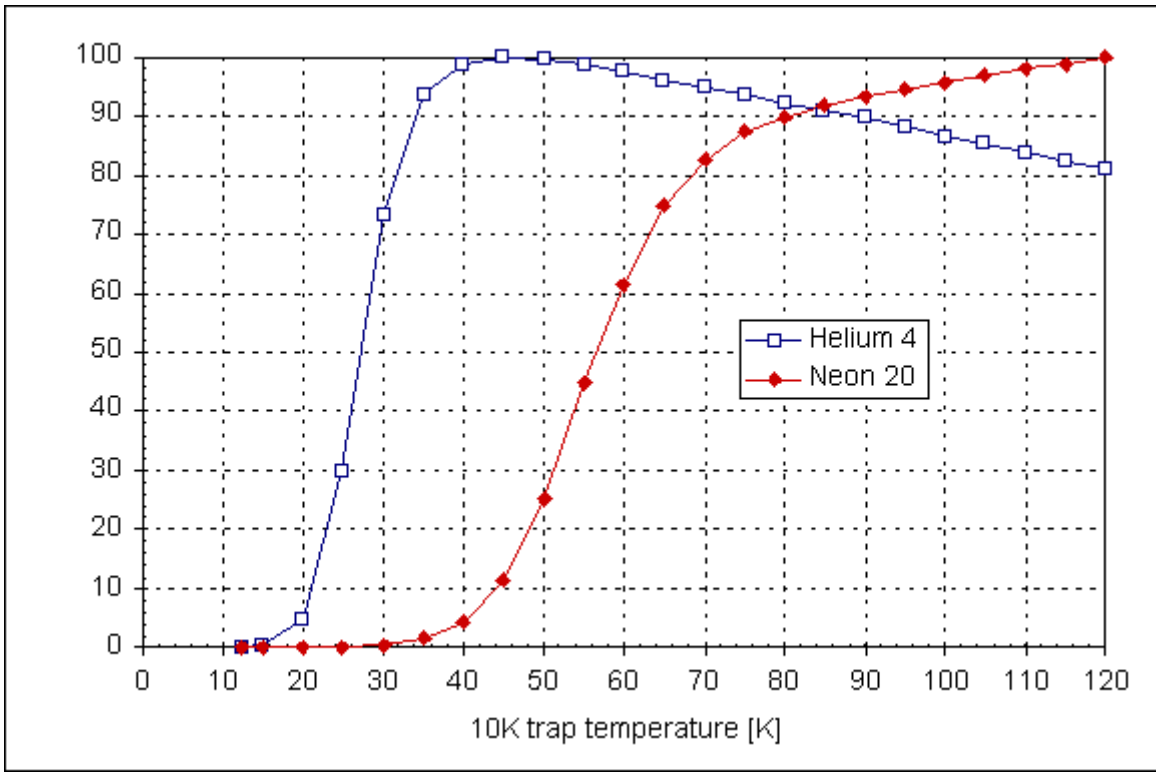

Fig. 10b: 4He discrimination by neon in the SFMS (helium isotope MS).

Mass spectrometer

General Design

The sector field mass spectrometers (SFMS) used for helium isotope and tritium measurement are commercial instruments (Fig. 11, VG 5400; Micromass; Manchester, UK). They are designed for measurement of all noble gases (He, Ne, Ar, Kr, Xe) and their isotopes. For our purpose, they are dedicated to helium isotope measurements. They are operated in a static mode, i.e., all pumps with the exception of two SAES getters are disconnected from the mass spectrometers during sample measurement. The SAES getters keep the background pressure low, especially that arising from hydrogen and HD without pumping the noble gases.

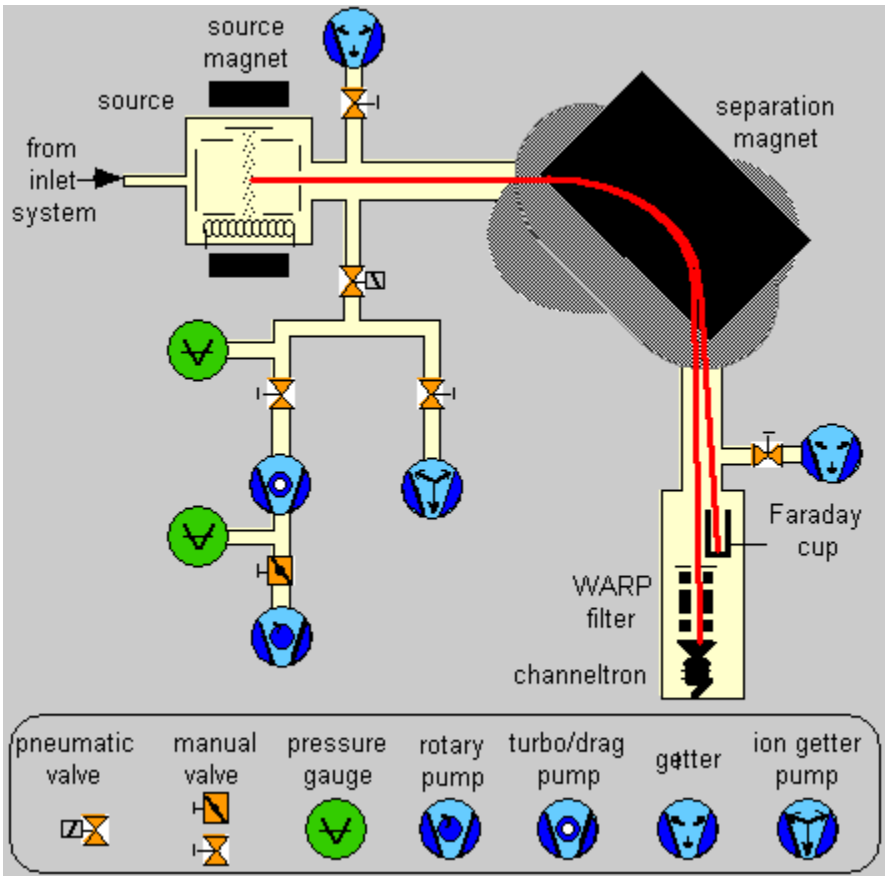

Fig. 11: Schematic diagram of the VG 5400 noble gas mass spectrometer

Vacuum system

During automated operation, the mass spectrometers are pumped between measurements of individual samples or standards by ion getter pumps (Varian, StarCell VacIon Plus 40) attached to the flight tubes by pneumatically operated valves (VG, CR 38 TU, and VAT, Series 57, respectively). The advantages of ion getter pumps are (1) the absence of any oil (low hydrogen and HD levels), and (2) a closed system in case of a power failure. An additional pumping line consisting of a turbomolecular - drag pump (Balzers, TMU 065; tritium mass spectrometer) backed by a rotary pump (Edwards, E2M2) is used for initial pumping after venting the system. An oven can be mounted over all vacuum parts for bakeouts at temperatures of up to 350 °C. A Penning gauge (Balzers, IKR 260) is used to monitor the pressure in the turbomolecular - drag pumping line (usually this pressure is below the detection limit of 2×10^{-9} mbar).

Ion source

The VG 5400 uses a Nier-type electron impact ion source (Bright source). The electron emission is controlled by the trap current which regulates the filament current. To achieve the sensitivity required for high-precision helium isotope and tritium measurements, we have to use a relatively high trap current of 800 µA. The electrons emitted from the filament are forced onto circular trajectories by a magnetic field (source magnets) to increase the ionization probability of gas atoms in the source. The ions are extracted from the ionization cage and accelerated to 4.5 keV. The field of the separation magnet is controlled by a Hall probe through adjustment of the magnet current.

Ion detection

The ^{4}He ion beam is measured with a Faraday cup as the voltage produced over a 10^{10} Ohm resistance. A 0.4 cm^3 STP air standard produces a signal of about 2.5 V (measured by a 7-digit-voltmeter; Solartron Instruments, 7060 system), which is equivalent to 250 pA or 1.5×10^9 ^{4}He atoms per second.

A channeltron (Galileo, 4869 EIC) operated in the ion counting mode is used for measurement of the ^{3}He beam. The channeltrons produce a good plateau in the HV (Brandenburg, alpha III unit) versus count rate plot (Fig. 12). This plateau is typically located between 1.6 and 2.4 kV and its absolute position on the HV axis varies between individual channeltrons. The high voltage used for sample measurement has to be adjusted during the aging process of the channeltron (typically requiring increased high voltages). The ion beam produces a pulse in the channeltron (about 15 mV) which is amplified by about a factor of 10 in a preamplifier (Ortec, 9301), and another factor of 10 in the main amplifier (Phillips, 9650). The amplified signal is processed by using a discriminator (Phillips, 6930) and registered by a 100 MHz timer - counter unit (Ortec, 996). A 0.4 cm^3 air standard results in a ^{3}He count rate of about 2000 cps.

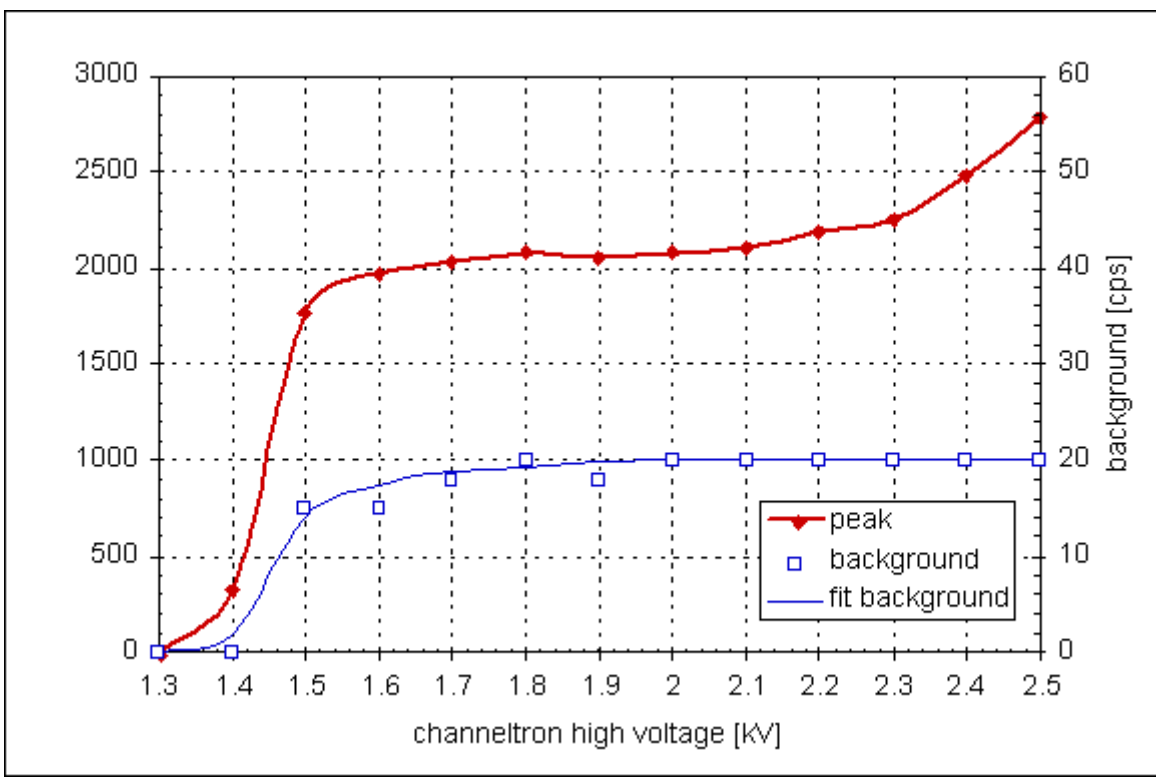

Fig. 12: Channeltron count rate versus high voltage. Note extended scale for background

count rate (right Y-axis).

Before reaching the channeltron the ^{3}He beam passes a velocity filter (WARP spell out the acronym filter from Micromass) to reduce the background by stopping scattered ions (tritium mass spectrometer only). This filter acts also as a protection for the channeltron. In case of high channeltron count rates, it blocks all incoming ions.

Tuning and peak shapes

The sensitivity of the mass spectrometers is mainly a function of the source parameters: repeller, electron energy, focus, beam center and source magnet position. The peak shape, on the other hand, is mainly determined by the position of the separation magnet. The position of the magnet can be adjusted in 3 dimensions. Additionally, there is an adjustable "pole shoe". The observed helium peak shapes (Figs. 13 to 16) are also a function of the ratio of the aperture to the peak width ratio, which determines the flatness of the peaks.

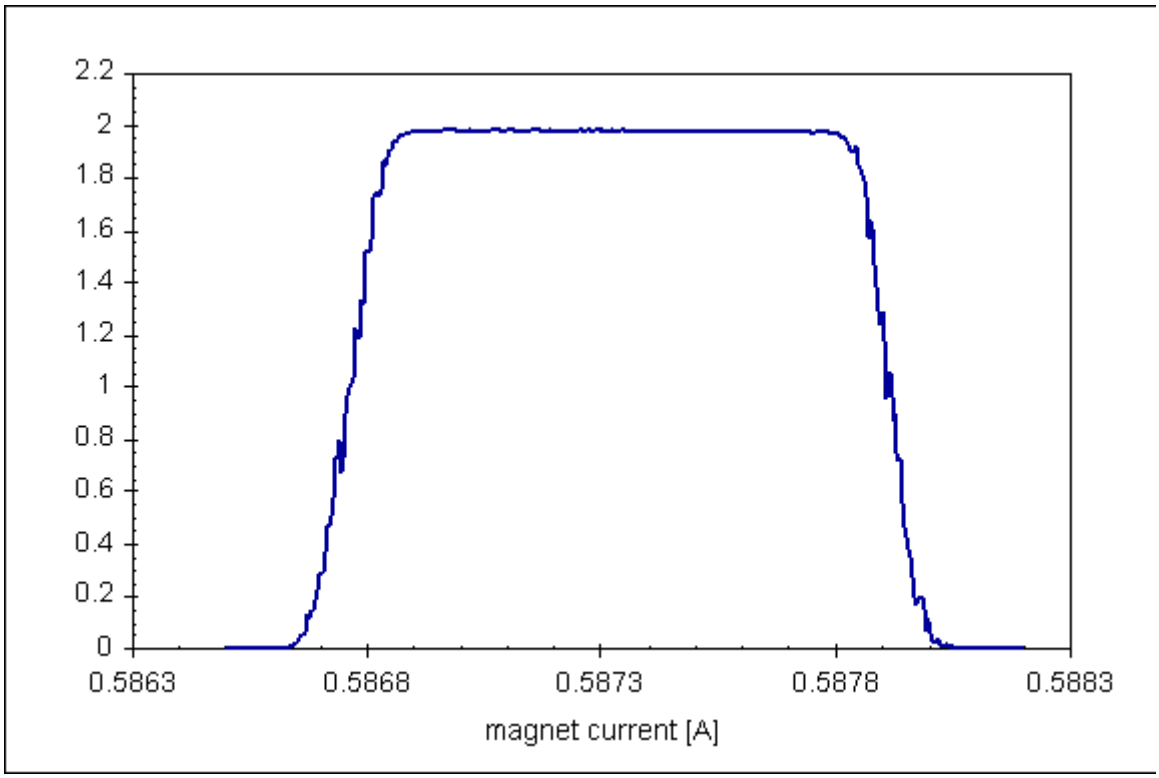

Fig. 13: 4He peak measured on the helium isotope SFMS using a Faraday cup (0.4 cm3 air standard)

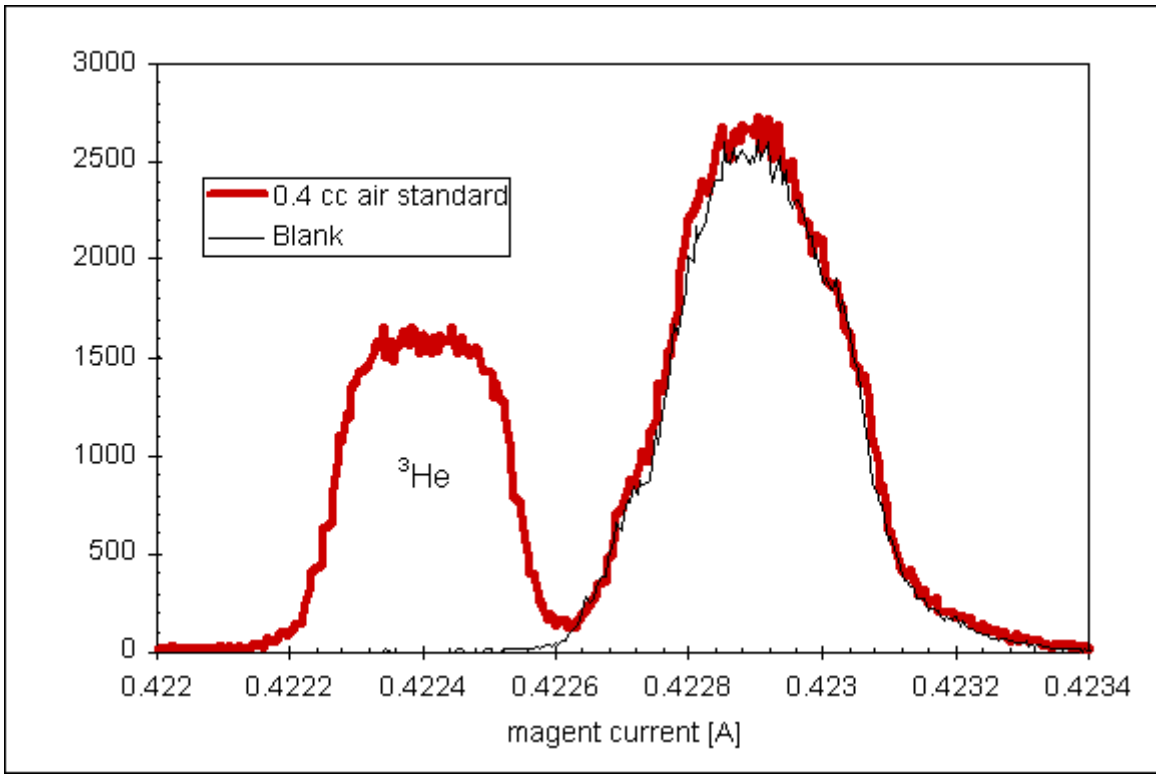

Fig. 14: 3He and HD/H3 peaks measured with a channeltron shortly after a bakeout (0.4 cm3 air standard).

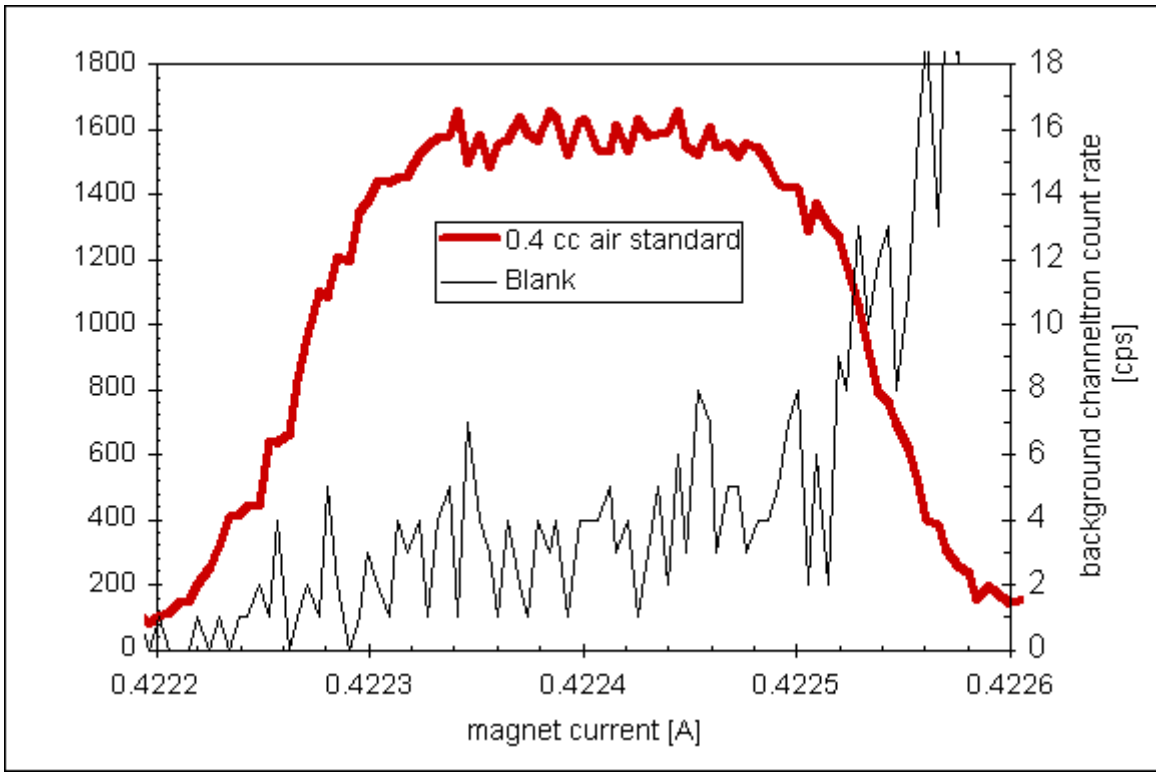

Fig. 15: 3He peak measured with a channeltron (0.4 cm3 air standard). Same 3He peak as in Fig. 4; scale for background count rate extended by a factor of 100.

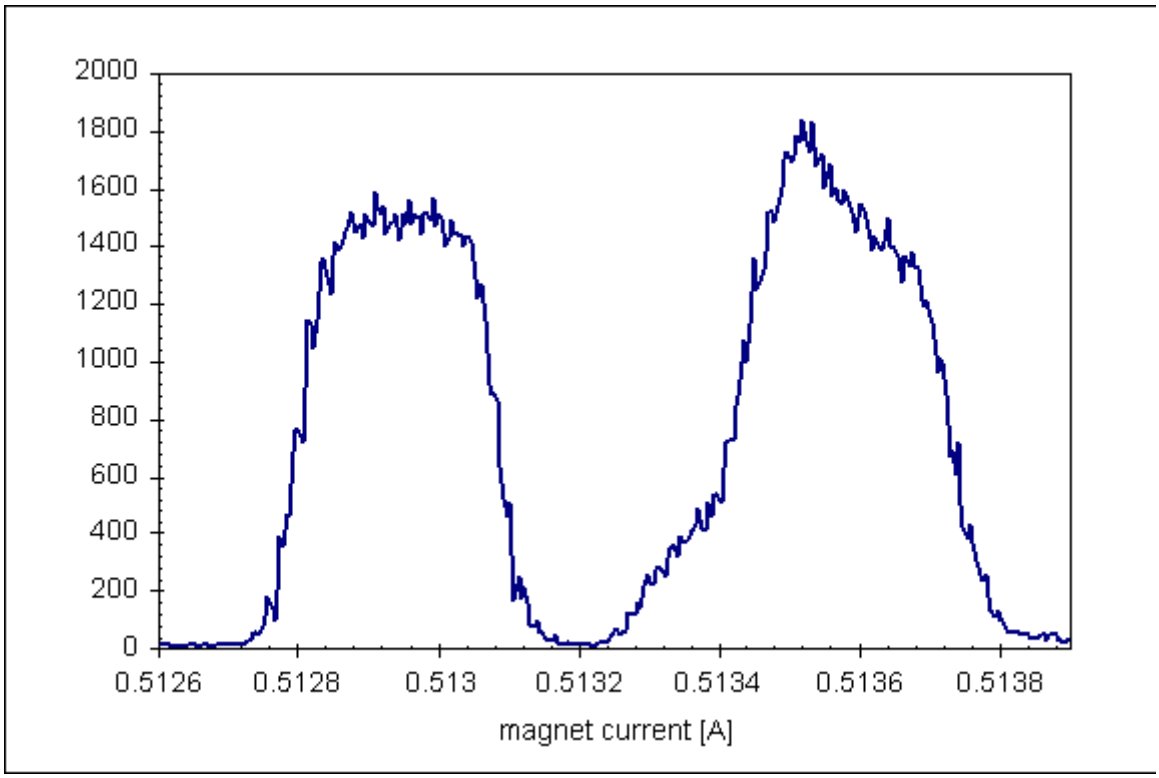

Fig. 16 3He and HD/H3 peaks measured with a channeltron 3 days after a bakeout

The ^{3}He peaks are narrower by about a factor of three compared to ^{4}He due to the different apertures (2 mm in front of the Faraday cup and 0.6 mm in front of the channeltron). In Figs. 14 and 16, the left peaks correspond to mass ^{3}He (3.01603 AMU) and the right peaks are a combination of HD (hydrogen-deuterium molecule, 3.02193 AMU) and H_3 (3.02348 AMU). The separation of the ^{3}He peak from the other peaks with mass three is an essential feature of a mass spectrometer for ^{3}He measurements. The scans plotted in Figs. 14 and 15 were produced a few days after a system bakeout following a change of both the filament and the channeltron. The HD/H_3 peak decreases significantly over a period of about one week (Fig. 16) and reaches a fraction of a 0.4 cm^3 STP air standard count rate after several weeks.

^{4}He and ^{3}He/^{4}He ratio measurements

Background information

A typical 40 g water-sample is standardized by 0.4 cm^3 air standards, which contain roughly 2×10^{-6} cm^3 STP He and 3×10^{-12} cm^3 STP ^{3}He, corresponding to 5.6×10^{13} ^{4}He atoms and 7.9×10^{7} ^{3}He atoms, respectively. A typical signal on the Faraday cup for such a sample or standard is 2.5 V over a 10^{10} Ohm resistance, equivalent to 1.6×10^{9} ^{4}He ions per second or 250 pA. The typical ^{3}He count rate on the channeltron is 2000 cps . With a counting time of 420 seconds, the total number of ^{3}He atoms counted on the channeltron is about 840,000 with a statistical error of $\pm$ 0.11 %. During this time, 1.4 % of all the ^{3}He atoms admitted to the mass spectrometer are counted. The ion consumption rate is about 2.7×10^{9} atoms of ^{4}He per second equivalent to 0.3 % per minute or 4 % over the measurement period (13 minutes). The memory of the SFMS for ^{4}He in the range of a typical air standard (0.4 cm^3 air) is about 0.2 %.

air standard size	0.40	cm^3 air (or about 40 g H_2O)	
	2×10^{-06}	cm^3 STP He	
	3×10^{-12}	cm^3 STP ^{3}He	
	5.6×10^{13}	atoms He	
	7.9×10^{7}	atoms ^{3}He	
voltage	2.5	V	
resistance	1.00×10^{10}	Ohm	
^{4}He ion current	2.50×10^{10}	A	
^{4}He ions per second	1.56×10^{9}	$^4He^+$/s	
^{3}He count rate	2000	cps	
counting time on ^{3}He	420	s	
statistical error	840,000	counts	± 0.11%
counted He atoms	1.44%	efficiency	
ion consumption rate	2.70×10^{9}	He/s	
relative ion consumption rate	0.30	%/s	

Tab. 1 Typical numbers for a helium isotope measurement

Standardization

The standardization is accomplished by measuring a sufficient number of air standards of

varying size before and between sample measurements. The air standards are prepared by using pipettes with pneumatically operated valves. During a typical measurement day, we measure about 20 air standards and about 5 substandards (for correction of non-linearity effects). The precision of the measurements are derived from the quality of a fit through the air standards (zero, first or second order; for an example, see Fig. 17)

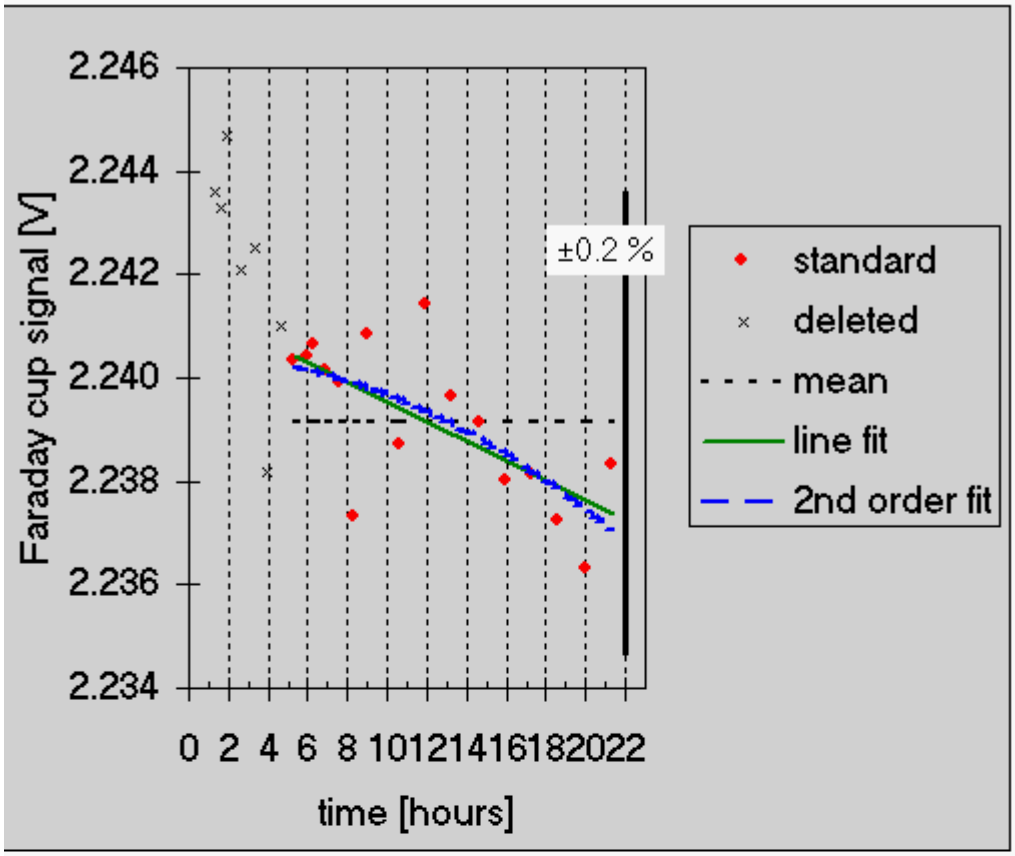

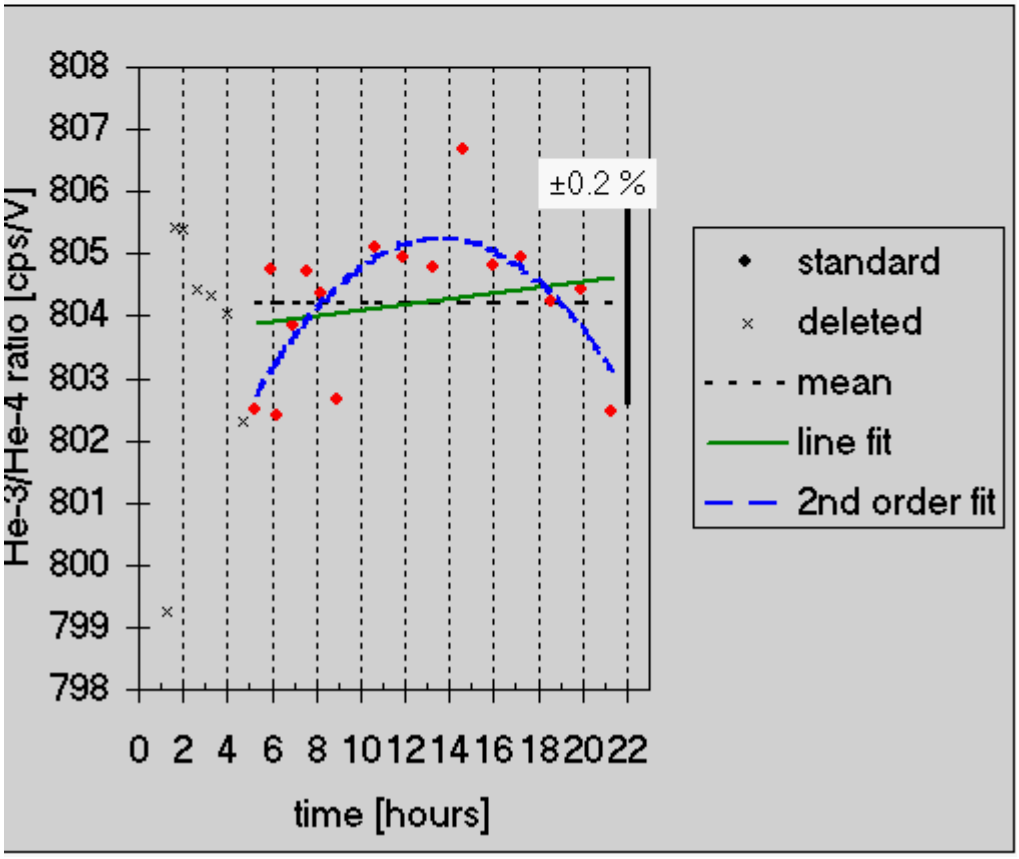

Fig. 17: Plots of 4He (a) and 3He/4He (b) standard measurements over a period of one day.

Linearity and stability

Most mass spectrometers are not completely linear. Non-linearity means, that, for example, measurement of a standard with twice the amount of helium does not result in a signal on the Faraday cup or the channeltron that is exactly a factor of two higher. To correct for this non-linearity, substandards have to be measured. Their size should be chosen in a way, that the sample size is always bracketed by those of substandards and standards.

Typical deviations of the ^{4}He concentration and the ^{3}He/^{4}He ratio from linearity for a variation of 0.1 cm^3 STP around the 0.4 cm^3 STP standard are 0.5 % and less than 0.1 %, respectively (Figs. 18a and 18b). The data plotted in Figs. 18a-c are measured with one filament, but are divided into five individual periods with different tuning of the ion source. The deviations are calculated relative to a 0.4 cm^3 STP air standard. The data points are mean values from at least 10 substandards (the plotted error represents the standard deviation from the mean value). The helium concentrations of most 40 g water samples fall between 0.3 and 0.4 cm^3. For the specific example shown in Figs. 18a-c, the ^{4}He non-linearity of about 0.5 % is significantly higher than the measurement precision of 0.2 to 0.3 % and has to be corrected. The δ ^{3}He non-linearity of about 0.1% is of the same order as the measurement precision of about 0.2 % and is also corrected. The linearity correction is different for each filament and is also a function of the tuning of the source. The linearity of the QPMS is shown for three measurement periods (Fig. 18c). Between these periods we changed the electronics and had an extended shutdown of the QPMS (tritium measurements). Usually, the Ne concentration of a 40 g water sample falls between those of 0.4 or 0.5 cm^3 STP of air. The non-linearity can be up to 0.8 % and has to be corrected for.

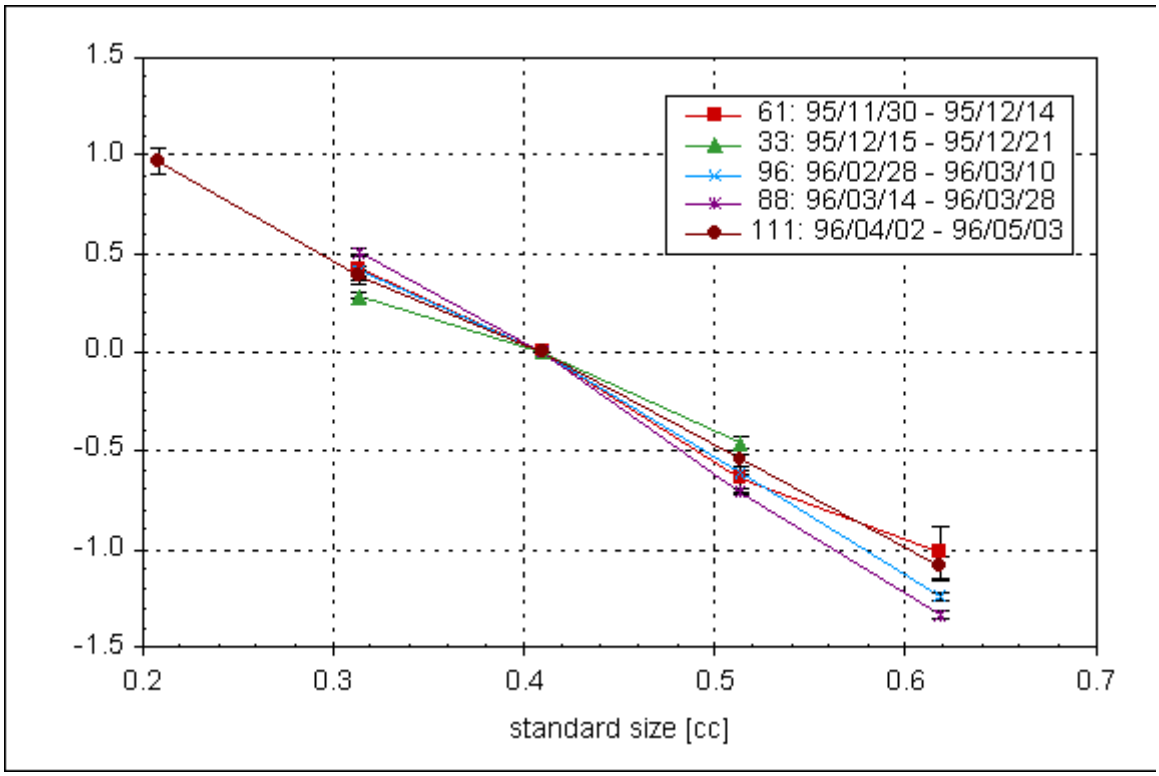

Fig. 18a: Deviation of 4He substandards from a 0.4 cm3 air standard. The numbers in the figure legend indicate the number of standards and the measurement periods. All data are

collected with the same filament.

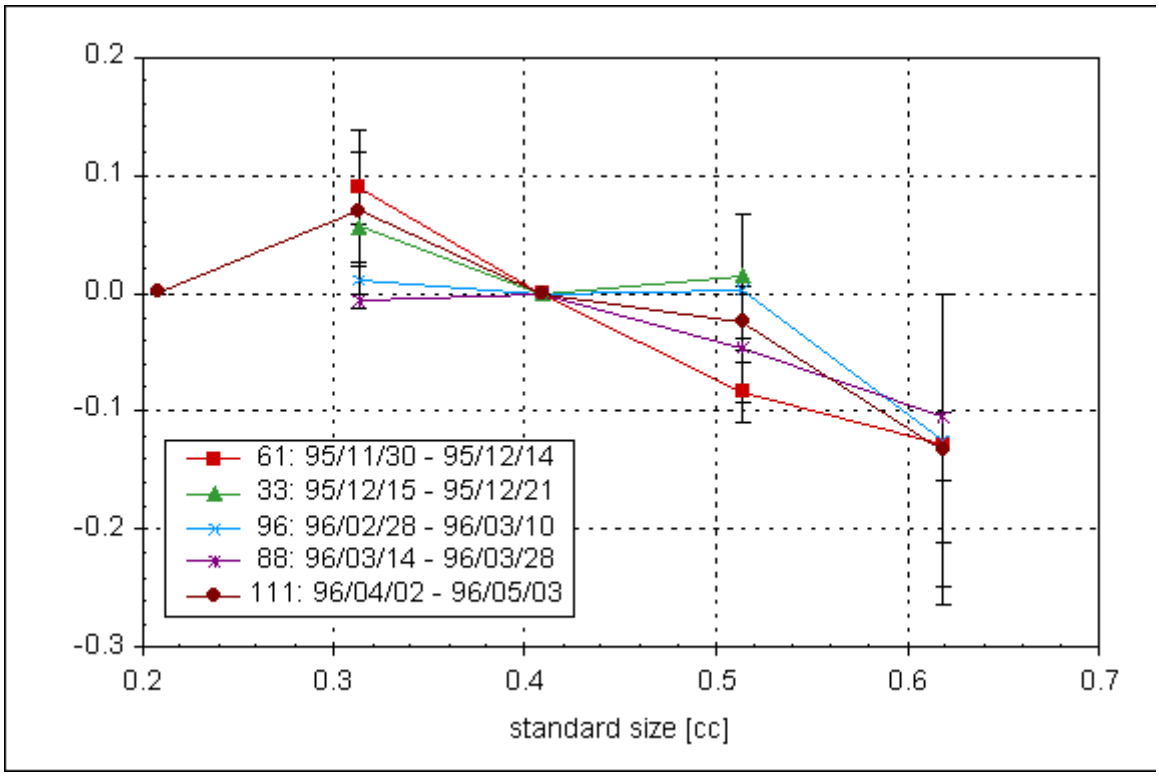

Fig. 18b: Same as 17a except for d3He.

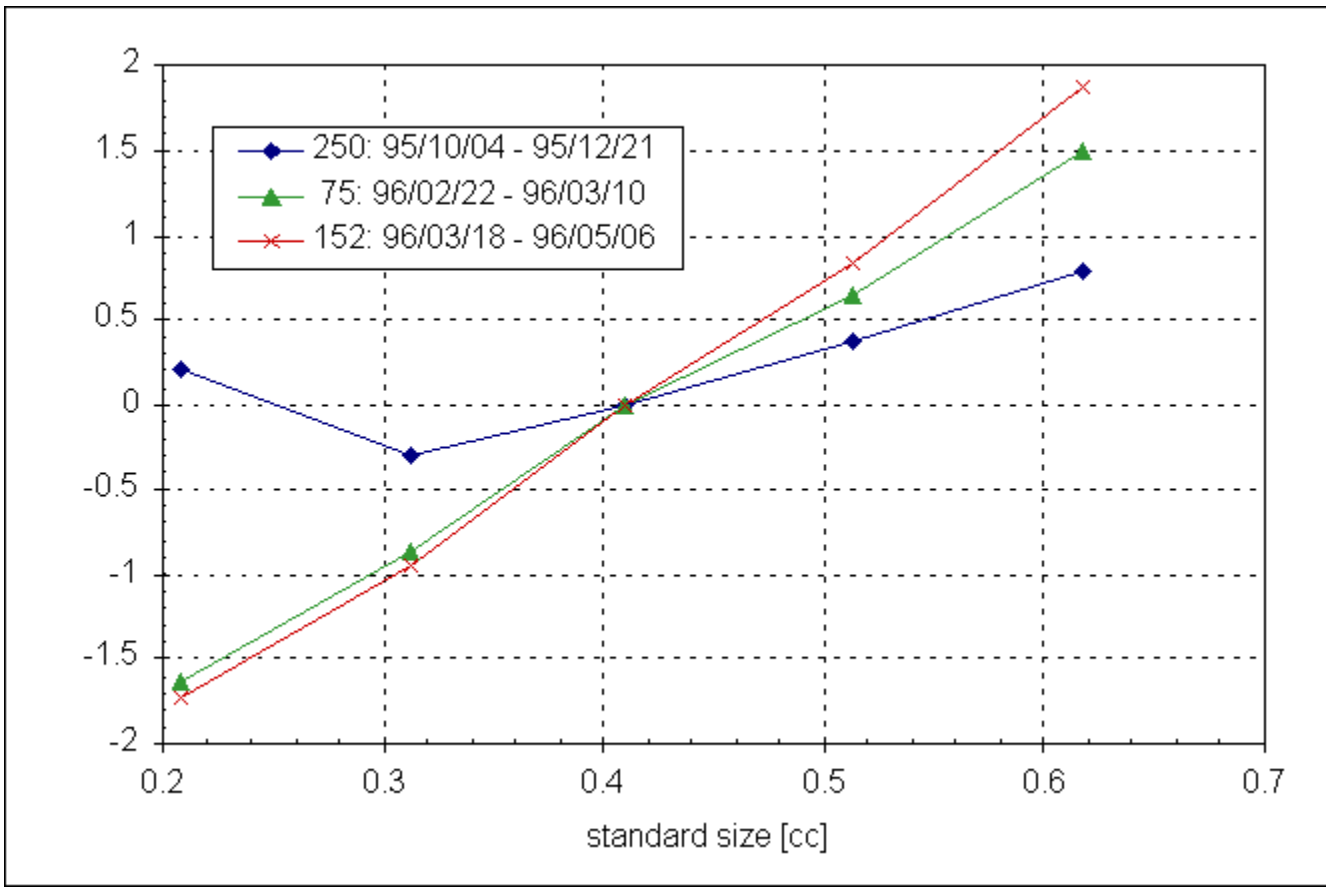

Fig. 18c: Same as 17a except for neon.

Fig. 19 shows the long-term stability (30 hours) during the initial testing of one of the mass spectrometers. Trends in the measured standard signals do not influence the precision of the measurements, as long as they can be corrected for by a reasonably tight fit curve (zero to second order).

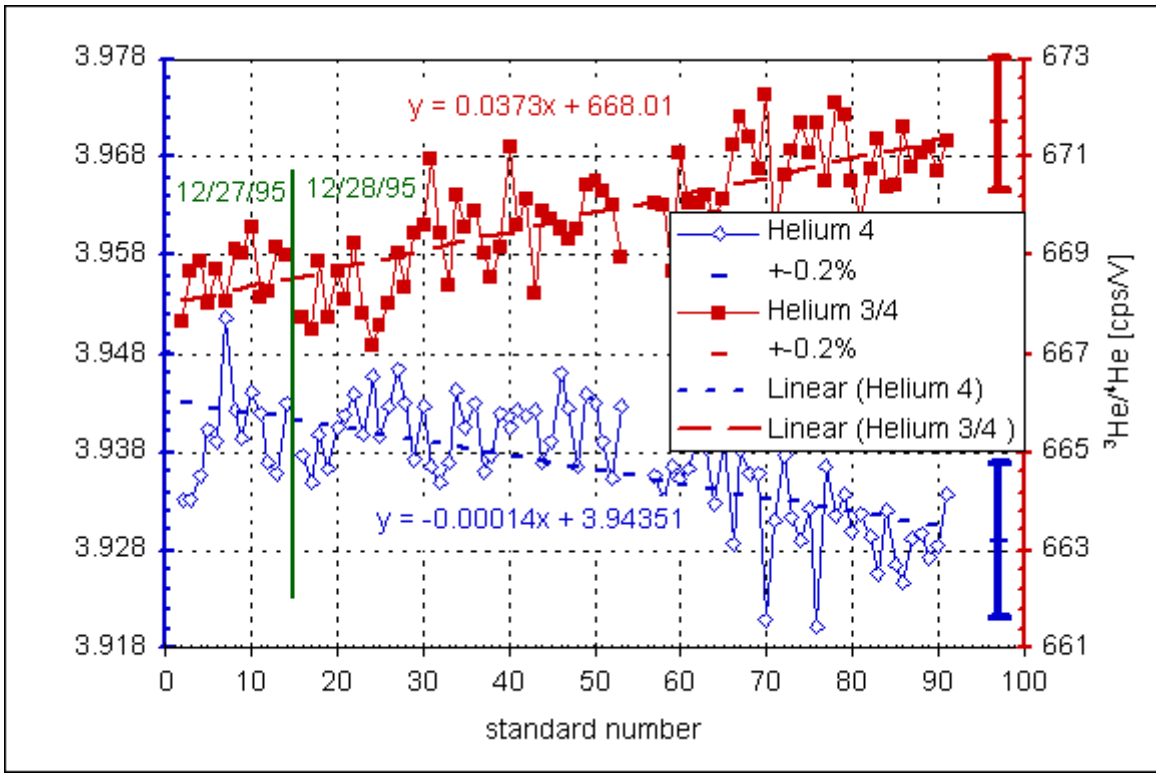

Fig. 19: Long-term stability of 4He and 3He/4He ratio measurements (86 standards). The two bars span a range of ±0.2 % of the measured 3He/4He ratios and 4He concentrations, respectively.

Measurement Procedure

The procedure of measuring a standard or sample is shown in table 2, which is an excerpt from the log-file of the data acquisition computer. The measurement starts with scans over the ^{4}He and ^{3}He peaks. On the basis of these scans, specific magnetic field values are assigned for the measurement period following the scans. The measurement is divided into 10 blocks. During each block, the magnetic field is switched from ^{4}He peak (30 times 160 msec) to ^{4}He background (5 times 160 msec), ^{3}He peak (42 times 1 sec), and finally ^{3}He background (12 times 1 sec).

For evaluation of the raw data, we use the linear fit of the net ^{4}He signal (peak minus background) extrapolated to the inlet time and the net mean value of the ^{3}He count rates. The total time required for measurement of a helium isotope sample including the scans, the 10 measurement blocks, and the pumping is about 22 minutes.

Cold_head(2) at 44.95 K

Calling Admit_sample() at Thu Jun 27 10:37:52 1996

Sample in MS at Thu Jun 27 10:38:18 1996

Std : S15b-0278-4

Ok

0 * Pip1, 1 * Pip2

Measurement started at Thu Jun 27 10:40:47 1996

	He4		He3	
Magnet setting:	0.49332	0.49	0.43067	0.4245
Integration time:	160	160	1000	1000
Repeat:	30	5	42	12

Cycle:		Peak1: [V]	Backgrd1: [V]	Peak2: [cps]	Backgrd2 [cps]	Ratio [cps/V]
0	10:40:58	2.4641	0.0020083	2055.8	42.583	817.7
1	10:42:18	2.4515	0.0019588	2043.1	42.5	816.74
2	10:44:02	2.4312	0.0019268	2035.1	44.75	819.32
3	10:45:59	2.4179	0.0019807	2010.4	43.667	814.07
4	10:47:19	2.4061	0.0019521	2015.7	45	819.7
5	10:48:40	2.3941	0.0019338	2013.9	45.833	822.72
6	10:50:00	2.382	0.0019425	1995.7	42.333	820.73
7	10:51:21	2.3696	0.001934	1986.8	41.5	821.61
8	10:52:40	2.3588	0.0019645	1983.7	45	822.58
9	10:53:59	2.3471	0.0019362	1983.9	43.333	827.49
Total:		---	---	8.4521e+05	5238	

Average (counts per cycle for He-3): 72.067 0.0097688 84521 523.8 820.27

Mean He4: 2.4003 +- 0.01239 (0.516 %)

Fitted values are extrapolated to Thu Jun 27 10:38:18 1996

Fit He4: 2.484 +- 0.0012203 (0.0491 %)

Mean He3: 1968.8 +- 2.2705 (0.115 %)

Total He3: 8.3997e+05 (0.109 %)

Fit He3: 2022.5 +- 4.5701 (0.226 %)

Mean He3/He4: 820.27 +- 1.1762 (0.143 %)

Fit He3/He4: 814.01 +- 1.8989 (0.233 %)

Ne20: 1.563e-09 +- 2.1947e-13 (0.014 %), range:0

Ne22: 1.5728e-09 +- 1.5519e-13 (0.00987 %), range:0

He-measurement ended at Thu Jun 27 10:55:30 1996

Tab. 2 Excerpt from the measurement log-file of one 0.4 cm3STP air standard

Tritium Measurements

Background information

A typical 400 g water sample with a tritium concentration of 0.2 TU contains 4.5×10^{-15} cm^3 STP ^3He or 1.2×10^5 ^3He atoms after an ingrowth time of 150 days (one TU is defined as the ratio of one tritium atom per 10^{18} hydrogen atoms.). A 0.1 cm^3 air standard pipette diluted by a factor of 160 contains about the same amount of ^3He. For this amount of ^3He we obtain a count rate of approximately 3 cps. Integration over a period of 1200 sec results in 3600 total counts with a statistical error of $\pm$ 1.7 %. Consequently, about 3 % of all ^3He atoms admitted to the mass spectrometer are detected during measurement. The background count rates vary considerably, mainly as a function of time since the last bakeout of the SFMS. The maximum background count rate tolerable for tritium measurements is about 1 cps. During extended tritium measurement periods the background count rate decreases to values below 0.15 cps.

Standardization

Compared to the helium isotope measurements, the tritium samples typically contain more than a factor of 100 less ^3He. Therefore, the standard size has to be adjusted. To utilize the same automatic pipettes used for helium isotope measurement, the air standard is diluted by a factor of about 160. The dilution is accomplished by expanding about 1 cm^3 STP of air drawn from the working standard container into a volume of approximately 1 liter. The standards used for tritium measurement are then drawn from this volume using the automated pipettes (Fig. 5). The $^3He/^4He$ ratio of samples can differ considerably from that of air used for standardization. For this reason it should be kept in mind that a possible discrimination of ^3He by ^4He is not necessarily corrected by the air standards.

The measured ^3He concentrations are converted from cm^3 STP to TU by using the following equation:

$$c_{trit} = \frac{^3He_{trit}}{C} \cdot \frac{e^{\lambda(t_s - t_e)}}{1 - e^{-\lambda(t_e - t_m)}} \cdot \frac{1}{W \cdot \left[1 - (S/1000)\right]} \cdot \left[1 - (\alpha - 1) \cdot \frac{W_0 - W}{W_0}\right]$$

c_{trit} tritium concentration in TU

$^3He_{trit}$ measured tritiogenic ^3He in cm^3 STP

C conversion factor from cm^3 STP to TU (2.4889×10^{-15} [(cm^3 STP/g)/TU])

λ radioactive decay constant of tritium (17.93 years., Clarke et al., 1976)

t_s, t_e, t_m dates of sampling, extraction and measurement, respectively

W_0, W weights of the sample before and after the extraction, respectively

S salinity in permille

α correction for the $^3H/H$ fractionation due to loss of (distilled) water during gas extraction. α = 1.15 (ratio of tritium concentration in the liquid phase to tritium concentration in the water vapor

(Clarke et al., 1976)

Linearity

Typically, the mass spectrometers perform fairly linearly in the partial pressure range for helium introduced into the SFMS during tritium measurement (Fig. 20). However, in some instances, we have to use a second-order fit to convert the measured voltages (^{4}He) and count rates (^{3}He) into helium concentrations. The fit curves generally intercept the y axis at the measured blank (line blank plus memory) values.

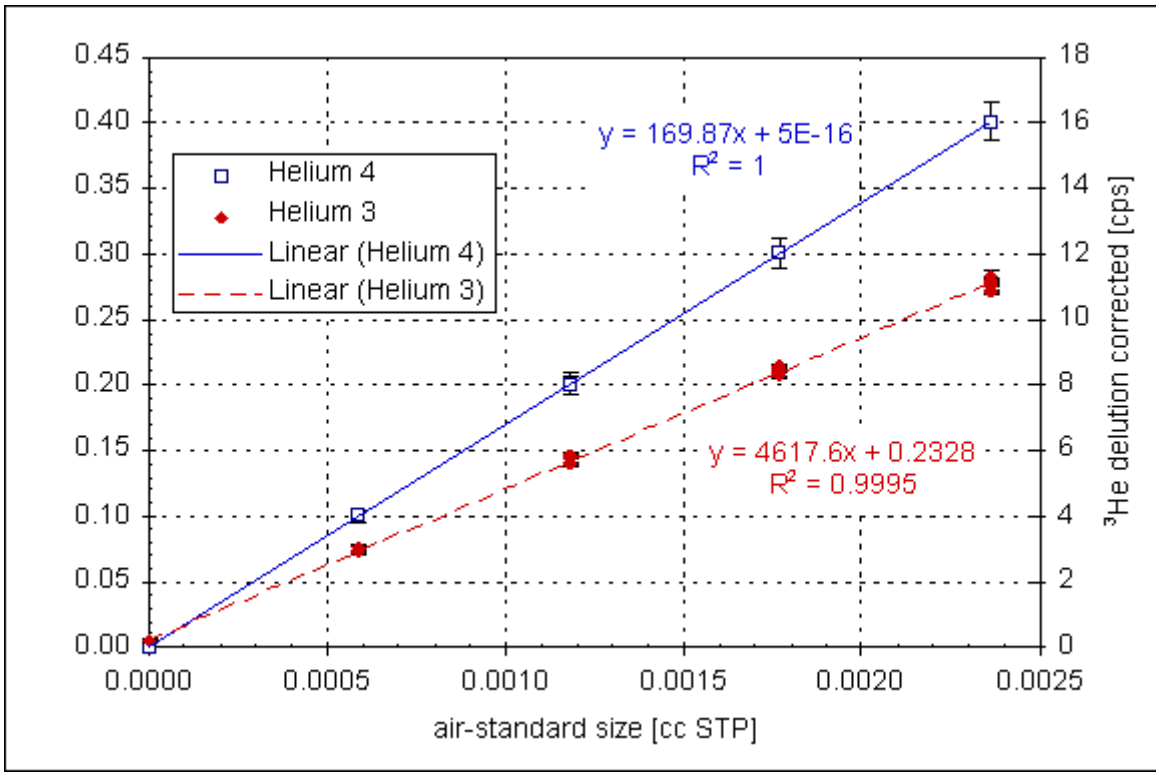

Fig. 20: 3He and 4He Linearity for a total of 93 measurements of diluted air standards and blanks

Blank

The low ^{3}He concentrations in tritium samples make them extremely sensitive to contamination. Measurement of the ^{4}He contained in the tritium samples allows us to subtract the ^{3}He left in the bulb due to incomplete gas extraction, as well as that introduced into the sample via diffusion or channeling through O-rings during the gas transfer from the bulbs into the inlet system of the mass spectrometer. Correction for atmospheric ^{3}He is possible as long as its signal is smaller than that of the sample. Therefore, the maximum amount of atmospheric helium that can be tolerated in a sample is a function of its tritiogenic ^{3}He concentration.

NET	#	^{4}He	±	^{3}He	±	^{3}He/^{4}He	±
			[%]		[%]	[to air	[%]

			[cm^3 STP]		[cm^3 STP]		ratio]	
	MS Blank	6	7.28×10^{-12}	53	1.40×10^{-16}	13	13.90	55
	Inlet Blank	6	2.86×10^{-12}	200	5.95×10^{-17}	63	15.02	210
	Branch Blank	16	8.31×10^{-11}	18	8.64×10^{-17}	51	0.75	54
	Repetition	6	1.09×10^{-09}	27	1.58×10^{-15}	25	1.05	37
	0.1 cm^3 Tr-Std	21	3.77×10^{-09}	2	5.19×10^{-15}	2	0.99	3

Tab. 3 Comparison of blanks

A tritium sample can be affected by several processes: (1) direct tritium contamination of the water during sample collection or processing in the laboratory (e.g., tritium addition from watches with tritiated dials or addition of water with high tritium concentrations to the samples). (2) indirect 'contamination' through addition of ^{3}He during the sample processing or measurement process. This includes incomplete gas extraction of the tritium sample, addition of ^{3}He through diffusion through O-rings in the extraction laboratory and in the mass spectrometer laboratory, or leaks in the vacuum system.

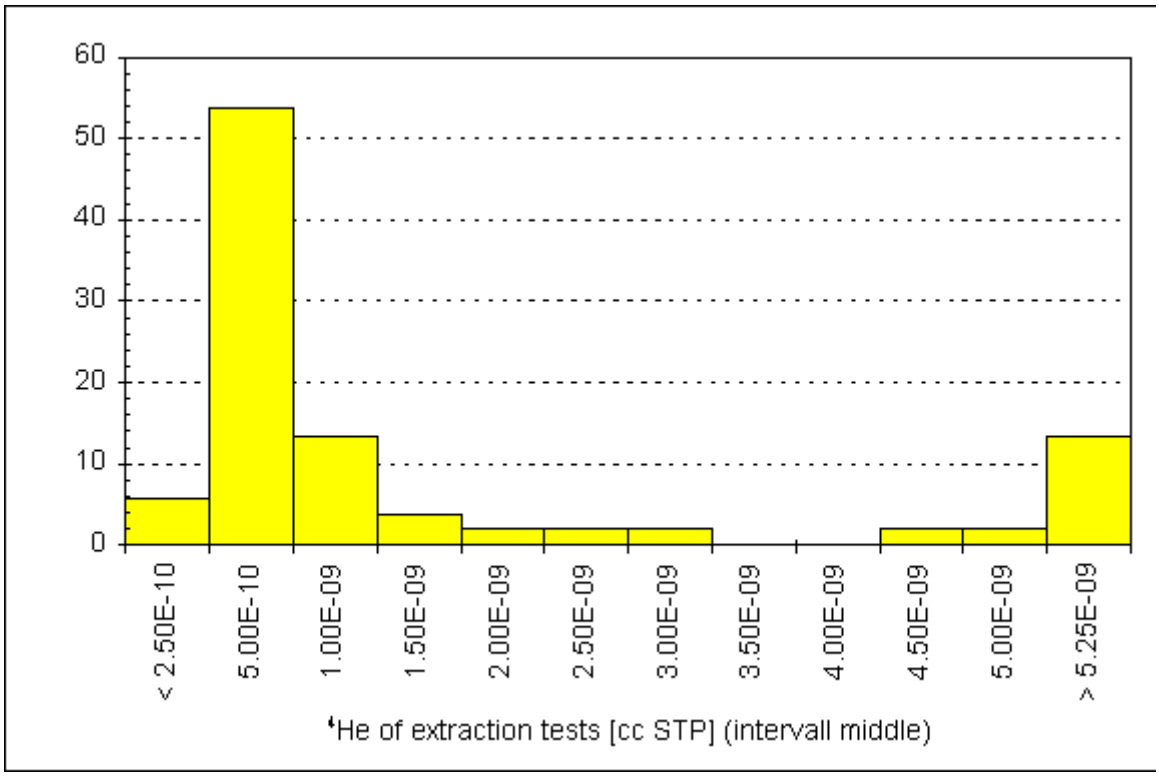

Fig. 21: 4He blanks of 52 large bulbs including 5 minutes of O-ring contribution (1 l bulbs with

400 g of water).

Bulb Blank

The so-called bulb blank is the sum of the helium components accumulated in the glass bulbs used for storage of the water sample for ^{3}He ingrowth from tritium decay. They represent the contamination factor of the extraction and the storage including: (1) helium from a leak in the vacuum system, which might not be detected because of the high water vapor pressure, (2) helium diffusion or channeling through an O-ring, (3)helium released from the glass bulb during flame sealing and storage, and (4) helium remaining in the water due to incomplete gas extraction.

The extraction efficiency has to be higher than 99.95 % to reduce the rest helium to levels of less than 7×10^{-10} cm^3 STP ^{4}He for a 40 g samples and 99.995 % for a 400 g samples, respectively. These ^{4}He amounts correspond to 9.7×10^{-16} cm^3 STP ^{3}He, if we assume an atmospheric ^{3}He/^{4}He ratio.

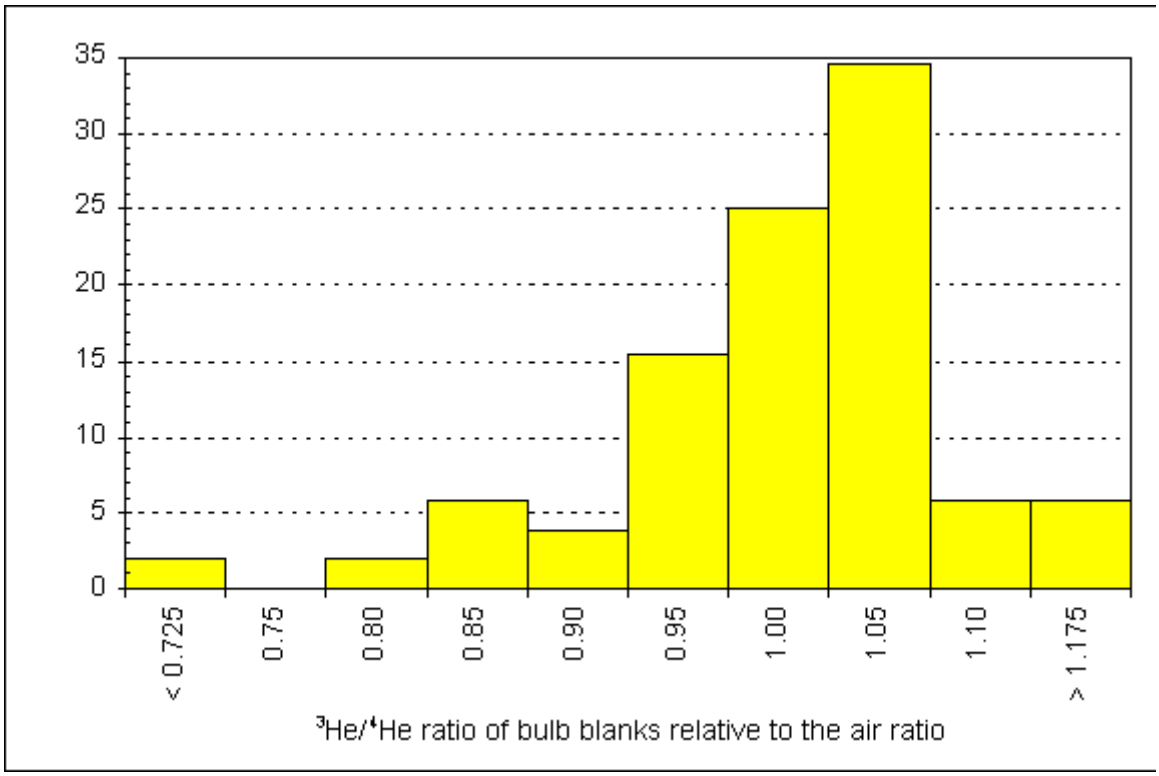

Fig. 22: 3He/4He ratio of 52 blanks measured in large bulbs. The average is 1.00 ± 0.09 times the air ratio.

The blanks of 52 test tritium extractions with large bulbs show that the contribution of the extraction is generally smaller than 10^{-9} cm^3 STP ^{4}He (Fig. 21). For these tests, low-tritium water was extracted and measured immediately after extraction. The ^{3}He/^{4}He ratio of these 52 test extractions is 1.00 ± 0.09 times the ^{3}He/^{4}He ratio of air (Fig. 22).

Addition of helium during the storage of the water sample for ^{3}He ingrowth is mainly caused by diffusion of from the glass into the sample. The use of special glass with low helium permeability and the storage of the extracted and flame-sealed samples at about -25 ^{o}C

reduce helium contributions to the bulb blank from this source (Suckow et al., 1990). Additionally, baking of the glass bulbs in a nitrogen atmosphere before sample extraction further reduces the amount of helium added to the bulb blank through diffusion from the glass (Bayer et al., 1985).

The large bulbs (volume: 1000 cm^3; surface: 500 cm^2) have a ^4He blank approximately 10 times higher than that of the small bulbs (volume: 200 cm^3; surface: 170 cm^2; Fig. 23). The ^4He blanks of both the small and the large bulbs span a fairly broad concentration range around the mean value. In both cases, a certain fraction of the blanks falls above the acceptable limit of 1×10^{-9} cm^3 STP (small bulbs) and 1×10^{-8} cm^3 STP (large bulbs).

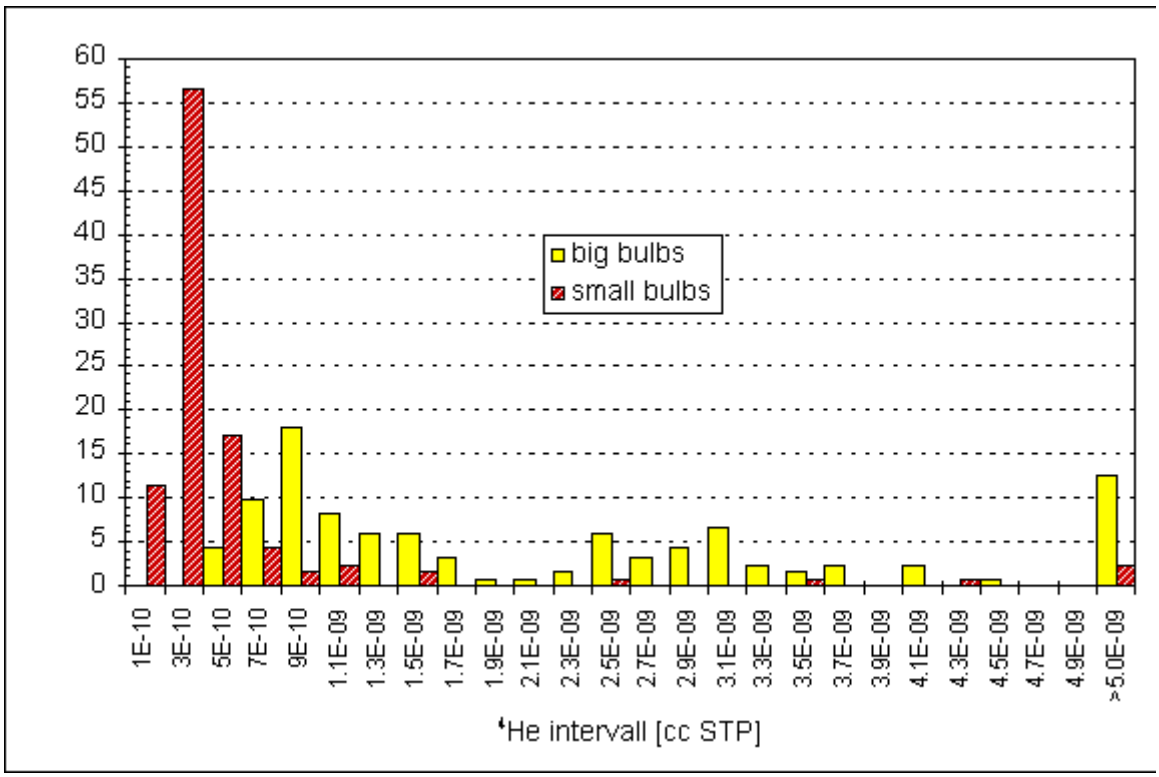

Fig. 23: 4He Blanks of 122 small bulbs extracted on the helium extraction system and of 299 large bulbs extracted on the tritium extraction system.

O-Ring Blanks

The main blank contribution during measurement is caused by diffusion and channeling of helium through the O-rings which are used to attach the glass bulbs to the all-metal inlet system. To determine the diffusion rate through the O-rings and at the same time to check the transfer efficiency of helium from the bulbs into the inlet system, we perform repeat measurements. During these measurements, a previously measured sample is subjected to one or more additional sample cycles without pumping the head space. If the helium transfer during the first measurement was complete, the repeat measurements should yield constant ^4He and ^3He amounts which reflect the diffusion of helium through the O-ring for the entire period between two measurements (about 36 min; the glass bulb is not pumped between repeat measurements). Evaluation of 153 repeat measurements (large bulbs, Fig. 24) yields an average O-ring contribution of 1.5×10^{-9} cm^3 STP ^4He for 36 minutes corresponding to 2×10^{-10} cm^3 STP for samples with 5 minutes transfer time or 7×10^{-13} cm^3 STP ^4He per second. The fact that there is no significant trend in the ^4He amounts of the repeat measurements

provides evidence for complete sample transfer during a 5 minutes interval (large bulbs). For the same 153 repeat measurement the $^3He/^4He$ ratio distribution is plotted as histogram in Fig. 25. The mean value is 1.00 ± 0.06 times the $^3He/^4He$ ratio of air.

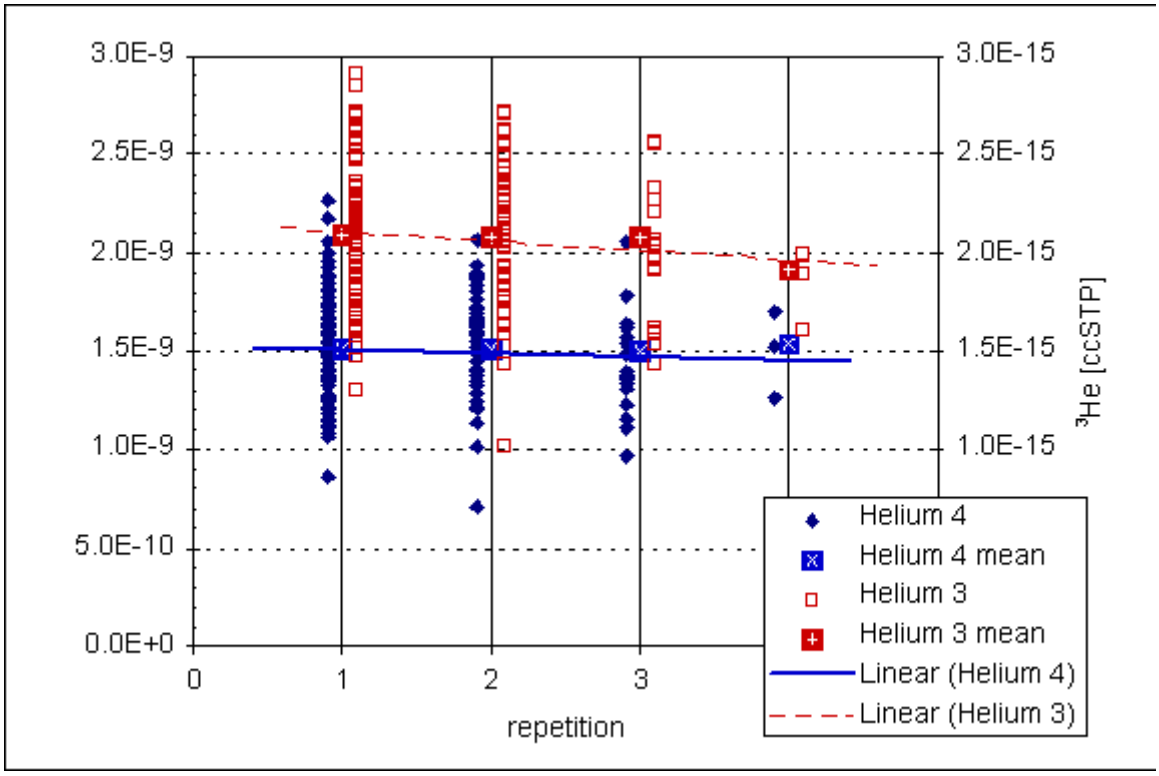

Fig. 24: 153 repeat measurements of 4He and 3He (large bulbs). The data are a check of the transfer efficiency of helium from the glass bulbs into the inlet system. Additionally, they are used to determine the diffusion rate of helium through wet O-rings.

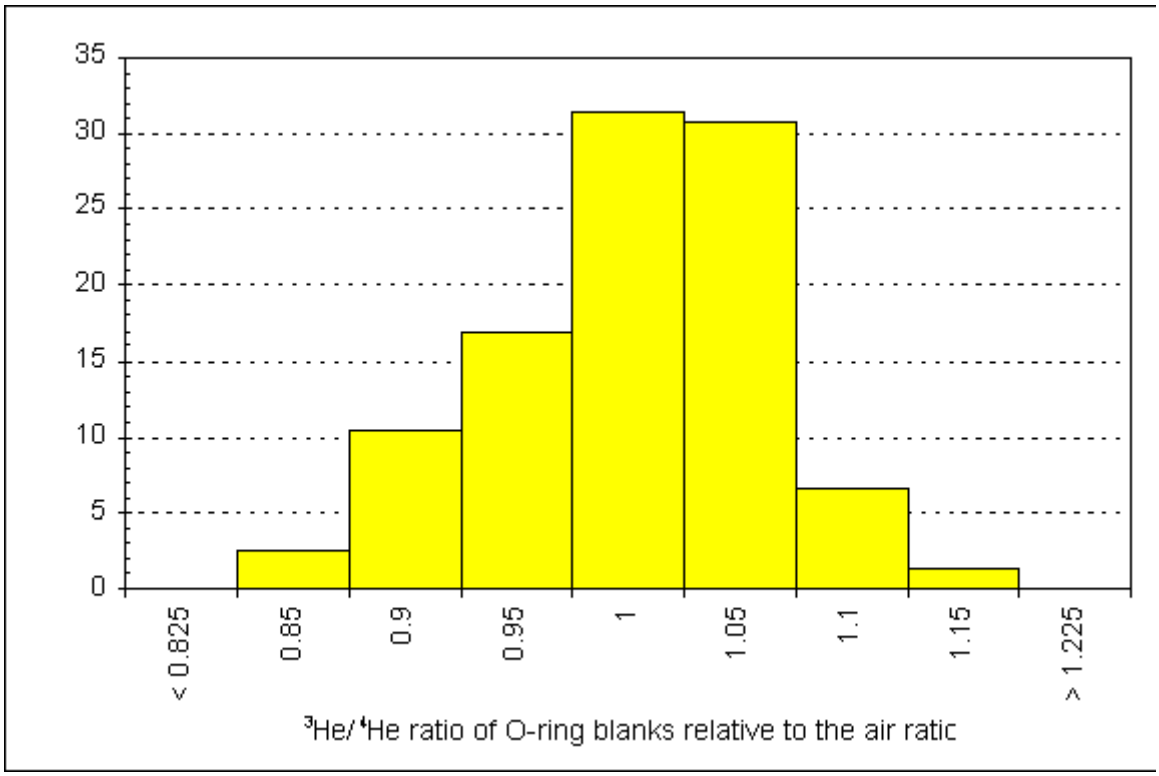

Fig. 25: 3He/4He ratio of 153 repeat measurements of the bulb blank of large bulbs.

In Fig. 26, four different types of blanks for ^{3}He and ^{4}He are plotted on a logarithmic scale. MS blank means a measurement with no sample inlet into the previously pumped mass spectrometer. It practically represents the memory of the mass spectrometer which depends on the type and size of samples measured since the last bakeout. The inlet blank is the amount of helium accumulating in the vacuum lines and traps used for preparation of an air standard. The branch and repetition blanks contain 2.5 and 36 minutes of O-ring contribution, respectively

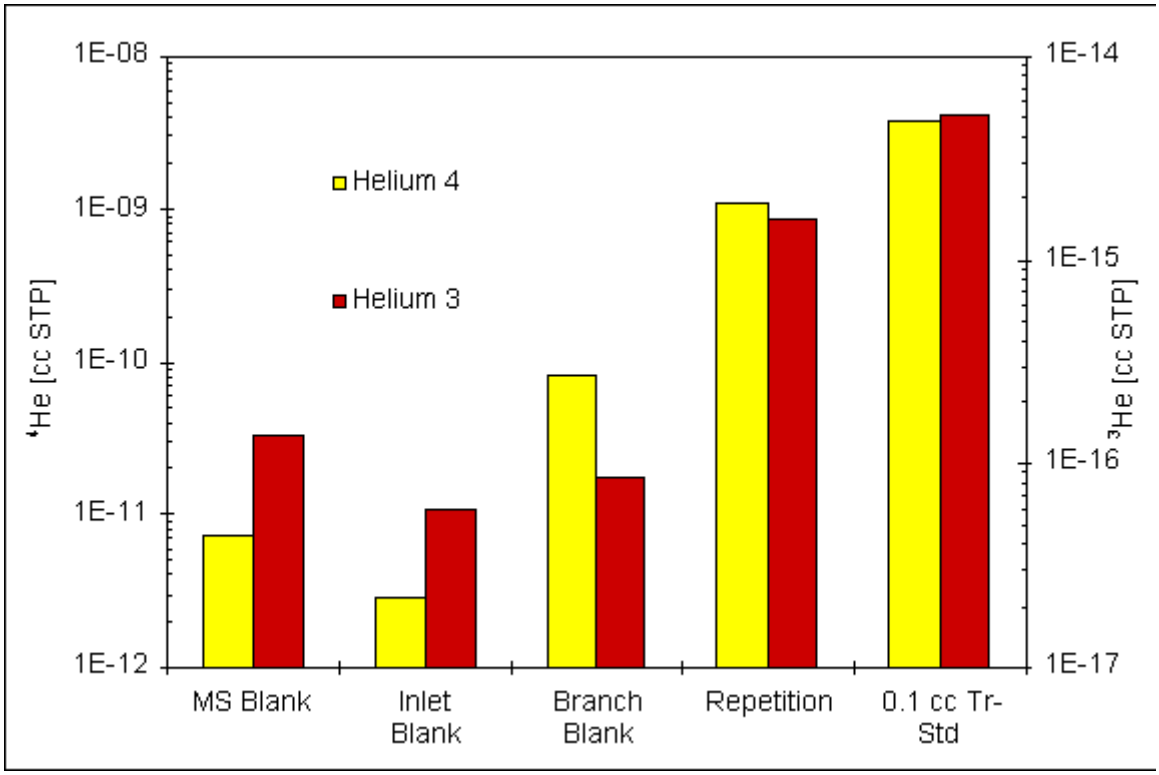

Fig. 26: Comparison of MS-, inlet system-, branch-, and repeat- measurement blanks. The 3He and 4He amounts contained in a 0.1 cm3 air standard diluted by a factor of 160 are plotted for comparison.

Measurement procedure

The procedures of measuring tritium via the ^{3}He ingrowth method are mainly the same as those for the measurement of helium isotopes with the exception of the determination of the center of the ^{3}He peak and the counting time required to achieve the appropriate counting statistics. Additionally, no neon measurement is performed simultaneously with the tritium measurements.

Because of the low ^{3}He signal, we use the HD/H_3 peak as indicator for the location of the ^{3}He peak. For this purpose, we determine the center of the HD/H_3 peak. The ^{3}He peak center is then determined by a predefined offset from the HD/H_3 peak.

Cold_head(2) at 0 K

Calling Admit_sample() at Wed Jul 10 14:19:17 1996

Sample in MS at Wed Jul 10 14:19:55 1996

Std : A-Std1-10-10

1 * Pip1, 0 * Pip2

Measurement started at Wed Jul 10 14:21:52 1996

	He4		He3	
Magnet setting:	0.636045	0.65	0.55584	0.57
Integration time:	1280	1280	1000	1000
Repeat:	5	5	120	20

Cycle:		Peak1: [V]	Backgrd1: [V]	Peak2: [cps]	Backgrd2 [cps]	Ratio [cps/V]
0	14:21:57	0.0059913	0.0023416	2.7	0	739.79
1	14:24:56	0.005985	0.0023331	2.9917	0	819.21
2	14:27:55	0.0059559	0.0023456	3.0667	0.05	835.56
3	14:30:55	0.0059367	0.0023429	2.9583	0	823.19
4	14:33:54	0.0059026	0.0023407	3.0583	0.1	830.55
5	14:36:53	0.0058708	0.0023346	2.9	0	820.09
6	14:39:53	0.0058443	0.0023406	2.8583	0	815.81
7	14:42:52	0.0058161	0.002339	2.825	0	812.47
8	14:45:52	0.0057919	0.0023406	3.0083	0.05	857.17
9	14:48:51	0.0057618	0.0023449	2.7583	0	807.26
Total:		---	---	3495	4	

Average (counts per cycle for He-3): 0.029428 0.011702 349.5 0.4 816.11

Mean He4: 0.0035453 +- 2.5802e-05 (0.728 %)

Fitted values are extrapolated to Wed Jul 10 14:19:55 1996

Fit He4: 0.0036853 +- 5.5774e-06 (0.151 %)

Mean He3: 2.8925 +- 0.05027 (1.74 %)

Total He3: 3491 (1.69 %)

Fit He3: 2.9247 +- 0.071378 (2.44 %)

Mean He3/He4: 816.11 +- 9.5821 (1.17 %)

Fit He3/He4: 793.37 +- 18.828 (2.37 %)

He-measurement ended at Wed Jul 10 14:52:11 1996

Tab. 4 Excerpt from the log-file of the measurement of one 0.1 c m^3 pipette (approx. 160 time diluted).

Measurement of ^{4}He and ^{3}He is divided into ten intervals (Tab. 3). During each interval the magnetic field is set to the masses of ^{4}He (5 times 1280 msec), ^{4}He background (5 times 1280 msec), ^{3}He (120 times 1 sec), and ^{3}He background (20 times 1 sec). For all further calculations of the helium blanks and tritium concentrations of the samples, the linear fit through the 10 background-corrected ^{4}He measurements extrapolated to the time of sample inlet and the background-corrected ^{3}He count rates are used. Following this procedure, a tritium measurement requires 36 minutes.

Acknowledgements

The acquisition of the first mass spectrometric system for measurement of helium isotopes was made possible by a generous donation of the W. M. Keck Foundation. Funds for the second helium isotope mass spectrometer were provided by the National Oceanographic and Atmospheric Administration (NOAA) through grant number NA37GP0518. The inlet system for the tritium mass spectrometer was funded by the National Science Foundation through grant OCE 94-02110. Construction of the tritium mass spectrometer was enabled through NOAA grant NA47GP0188. Partial support was provided for AL and RW through the Swiss National Science Foundation (Schweizer Nationalfonds). This is L-DEO contribution number xxxx.

Reference List

Bayer, R., P. Schlosser, G. Bönisch, H. Rupp, F. Zaucker, and G. Zimmek, Performance and blank components of a mass spectrometric system for routine measurement of helium isotopes and tritium by the 3He ingrowth method, Sitzungsbericht. der Heidelberger Akademie der Wissenschaften, Mathematisch Naturwissenschaftliche Klasse, 5, 241-279, Springer Verlag , Jahrgang **1989**

Begemann F., Libby W.F., Continental water balance, ground water inventory and storage times, surface ocean mixing rates and world-wide water circulation patterns from cosmic-ray and bomb tritium, Geochim Cosmochim Acta 12:277-296, **1957**

Clarke W.B., Beg M.A., Craig H., Excess 3He in the sea: Evidence for terrestrial primordial helium, Earth Planet Sci Lett 6:515-522 (**1969**)

Clarke, W. B., W. J. Jenkins and Z. Top , Determination of tritium by spectrometric measurement of 3He. International Journal of Applied Radioisotopes, 27, 515-522, **1976**

Glueckauf, E., A microanalysis of the helium and neon contents of air, Proc. Roy. Soc., Ser A (185) 98-119, **1946**

Östlund, H.G., Grall, C., Tritium Lab. Data Rep. 16, Rosenstiel, School of Marine and Atmospheric Science, University of Miami, **1987**

Jenkins W.J., Lott D.E., Davis M.W., Birdwhistell S.P., Matthewson M.O., Measuring Helium Isotopes and Tritium in Seawater Samples, WOCE Hydrographic Operations and Methods, WOCE Operations Manual, Vol. 3, Sec. 3.1, Part 3.1.3, WHP Office Report WHPO 91-1, WOCE Report No. 68/91, pp 21, July **1991**

Jenkins, W. J., Mass spectrometric measurement of tritium and 3He, I.A.E.A. Conference on low level tritium, (Invited Paper), Vienna, **1979**.

Lynch, M.F.C. & Kay, D.J., Performance of a mass spectrometer for determining low tritium levels from 3He/4He measurements, In: Methods of Low-Level Counting and Spectrometry, IAEA-SM-252/47, IAEA, Vienna, pp. 511-523, **1981**,

Ozima, M. and F.A. Podosek, Noble gas geochemistry, Cambridge University Press, Cambridge, 367 pp, **1983**

Suckow, A., Schlosser, P., Rupp, H. and Bayer, R., Diffusion and Permeation Constants of Helium in Duran, GW12, GW, N16B, AW and Supremax Glass. Glass Technology, 31, 160-164, **1990**

Weiss W., Roether W., Bader G., Determination of blanks in low-level tritium measurement, International Journal of Applied Radiation and Isotopes 27: 217-255, **1976**

Zaucker, F., Maccio, M., Ludin, A., Schlosser, P., Weppernig, R., Control of a Mass Spectrometric System and Sample Preparation Line by a Workstation under UNIX, in "Workstations und ihre Anwendungen", Proceedings of SIWORK '96, editet by C. Cap, v/d|f Hochschulverlag AG, ETH Zurich, ISBN 3 7281 2342 0, **1996**.

3E: STRONTIUM ISOTOPE ANALYSIS

Analysis of Sr in Water

Massachusetts Institute of Technology
Dept. of Earth, Atmospheric and Planetary Sciences Laboratory
Contact: Dr. Francis Ö. Dudás at 617-253-7993, email: fdudas@mit.edu

For Sr isotopic composition determinations, 15 – 50 mL of water are sufficient. If Sr content is to be determined, spike (^{84}Sr) is added. The water is evaporated with 1 mL conc. HNO_3; the dry residue is taken up in 1 mL conc. HNO_3 and dried again. The sample is refluxed on a hot plate overnight with 2 mL conc. HNO_3, then centrifuged. In exceptional cases, excess remaining organic matter is removed by reaction with 100 µL aliquots of H_2O_2. The supernatant is transferred to a clean beaker and again dried. This sample can then be taken up in HNO_3 for further processing.

Sr Separation

Sr is separated from other cations using 50 µL columns filled with Eichrome Sr-Spec resin. The sample is dissolved in 500 µL 3.5 N HNO_3, centrifuged, and loaded onto the column. Next, the column is rinsed with 1200 µL 3.5 N HNO_3. Sr is then eluted with 800 µL H_2O. A drop of 0.1 M H_3PO_4 is added and the sample dried down. For carbonate-rich samples, this procedure is repeated twice to improve separation of Sr from Ca, which interferes with mass spectrometry. The total procedural blank is ≤ 100 pg Sr with typical sample sizes of >150 ng Sr.

Mass Spectrometry

All analyses are completed on a GV IsoProbeT multicollector mass spectrometer. Sr is loaded on Re filaments in a solution of $TaCl_5$ and H_3PO_4, and is analyzed by dynamic multicollection. No fewer than 70 ratios are measured with the target intensity of ^{88}Sr = 3 V, providing a standard error for the mean of exponentially corrected $^{87}Sr/^{86}Sr$ of ≤0.001%. Data are corrected for ^{87}Rb interference based on measured ^{85}Rb abundance, fractionation corrected to $^{86}Sr/^{88}Sr$ = 0.1194, and reported with respect to a value of 0.710250 for NBS-987. The running mean of analyses of NBS-987 is 0.710240 ± 0.000015, and no bias correction is made to the analytical data.

3F: INORGANIC CHLORIDE ISOTOPE ANALYSIS

A. **AgCl precipitation for δ^{37}Cl measurement** *(modified from Eggenkamp, 1994)*

Materials

1. 1M KNO_3
2. Na_2HPO_4-Citric acid buffer solution (0.71g $Na_2HPO_4 \bullet 2H_2O$, 20.6g Citric acid to 1L DI-H_2O)
3. 0.4 M $AgNO_3$
4. Dilute HNO_3 (1mL conc. HNO_3 to 500 mL DI-H_2O; or 5mL 1M HNO_3 to 500 mL DI-H_2O).
5. 50 mL centrifuge tubes

Day 1: Sample selection and pretreatment (for water samples)

- Seawater collected from Conception Bay, Newfoundland (CBN) is the in-house Cl isotope reference material. At least two 0.1 mL to 0.2 mL CBN samples should be included in each batch.

1. Weigh out sample aliquot in a beaker
   - Volume of sample to use depends on the chloride concentration of the sample. 3000/ppm Cl^- (sample) gives the number of mL of sample to precipitate 12 mg AgCl (≈3mgCl≈85umol≈CH_3Cl). For sample volumes less than 10 mL, no pretreatment is necessary, but for dilute samples requiring more than 10mL, samples need to be reduced by evaporation to 10mL. Optimal sample size is 3-10mg Cl^-.
2. Add:
   - 4 mL of the KNO_3 solution to adjust ionic strength and
   - 2 mL of the citric acid buffer solution to adjust pH
3. Gently heat sample on a hotplate to **80°C**.
4. Remove sample from hotplate. Add 3 mL ~0.4 M $AgNO_3$ and cover with a watch glass. DO NOT STIR. Allow samples to ripen overnight or for several hours in the dark.
   - $AgNO_3$ and AgCl must be protected from the light!

Day 2: Precipitate recovery, centrifuge method

1. Transfer the sample plus liquid into a labeled 50 mL centrifuge tube, washing the beaker at least three times into the tube with small amounts of dilute HNO_3
2. Centrifuge at 4000 rpm for at least 4 minutes. Repeat if precipitate is not packed to the bottom. Carefully remove supernatant with a plastic disposable pipette. BE CAREFUL NOT TO DISTURB THE PRECIPITATE.
3. Add 40 mL dilute HNO_3, cap the tube, shake to wash, and centrifuge as above.
4. Repeat with a 20 mL wash, a 15 mL wash, and a 10 mL wash.
5. Place tube in the oven or the tube dryer to dry.
   - AgCl must be protected from the light—store tubes in the dark until the methyl iodide reaction step.

Eggenkamp, H., 1994. *The geochemistry of the chlorine isotopes*. Ph.D. Thesis, University of Utrecht, 150 pp.

B. Conversion of AgCl to CH_3Cl and isotope ratio mass spectrometry of CH_3Cl

(after Shouakar-Stash et al., 2005)

The dried AgCl precipitate is weighed (0.2 to 1.0 mg) and placed in a 20-mL amber crimp-seal vial. Excess CH_3I (100 microliters) is added to the vial under a He atmosphere in a glove box, the vial is crimp-sealed under He, and then placed in an oven at 80°C for 48 hours to convert AgCl to CH_3Cl. Following this reaction, vials are loaded onto a CombiPal autosampler. Gas is transferred from the crimp-seal vials to a gas chromatograph in a He carrier stream. Continuous-flow isotope ratio mass spectrometry is used to measure Cl isotope ratios of CH_3Cl following its separation from residual CH_3I by gas chromatography. All samples are analyzed in duplicate or triplicate. Precision of the method is better than ±0.1 ‰ for δ^{37}Cl.

Shouakar-Stash, O., Drimmie, R.J., and Frape, S.K., 2005. *Rapid Comm. Mass Spec.* 19, 121.

ATTACHMENT 4

SAMPLING PROCEDURES

4A: PERCHLORATE ISOTOPE SAMPLING

Summary of Method for Isotopic Analysis of Perchlorate in Groundwater

Environmental Isotope Geochemistry Laboratory
University of Illinois at Chicago (UIC)
Contact: Leslie Patterson at (312) 413-0098, e-mail lpatte2@uic.edu

Field Extraction

Extraction of perchlorate from groundwater samples is accomplished by sorption onto a highly perchlorate-selective bifunctional anion exchange resin. The laboratory provides a sampling apparatus, consisting of a prefilter and a glass column packed with a mixture of bifunctional resin and glass beads, for each sample to be collected. The amount of resin in the sampling apparatus is based on the expected perchlorate concentration in the groundwater, and optimized to recover ~20 milligrams of perchlorate. In the field, groundwater is passed through the sampling apparatus at a maximum flow rate of 10 bed volumes per minute. This is approximately 0.3 L/min for perchlorate concentrations greater than 6 ppb, 0.9 L/min for perchlorate concentrations between 2 – 6 ppb, and 3.5 L/min for perchlorate concentrations less than 2 ppb. For a sample concentration of 20 ppb perchlorate, the total volume of water required is 1,000 liters (264 gallons), requiring at least 55 hours of flow. The sampling apparatus is then disconnected, drained, plugged and returned to the UIC Environmental Isotope Geochemistry Laboratory.

4B: TRITIUM-HELIUM SAMPLING

Tritium/Helium-3 Dating

$^3H/^3He$ > **SAMPLING**

$^3H/^3He$ Sample Collection
Sampling Pictures

The Noble Gas Lab of Lamont-Doherty Earth Observatory recently informed the CFC lab that many of the He samples that are being collected by USGS projects are not properly crimped. To properly seal the copper tube, the brackets on the top and bottom must actually make contact so that light can no longer be seen through the contact area. The portion of the bracket that actually crimps the copper tube will never close completely on either side of the tube due to the thickness of the copper. Short of breaking the bolts off, it is impossible to over tighten the flanges or pinch the ends off the copper tube because the crimp area is designed with the precise clearance for a proper seal. In the field, I have noticed that some individuals lack the strength or the mechanical ability to tighten the nuts properly. In most cases the problem can be overcome by increasing the length of the wrench and by alternately tightening the nuts several turns at a time until the tube is completely sealed. If you suspect that a tube is not crimped properly, please do not send the sample to Lamont to be analyzed. For further information on sample collection, please see **http://water.usgs.gov/lab/3h3he/sampling/**.

Proper collection of a water sample for $^3H/^3He$ age determination requires:

1.Filling a special copper sample tube , in duplicate, that is used for helium and neon analyses, and determination of the $^3He/^4He$ isotope ratio (δ^3He) of dissolved helium.

2.Filling two 500cc bottles, which are used for tritium determination by helium ingrowth.

Safety-coated 500cc glass bottles with polycone seals are recommended for the tritium sample, though high-density polyethylene bottles with polycone seals may be substituted. If glass bottles are used, a headspace of several cc's should be left in the bottle to prevent breakage on warming (expansion). The water samples for helium, neon, and tritium determinations are collected in special pinch-off copper tubes (3/8-inch diameter, 30-inch length, containing about 40 cc of water, and fitted with stainless steel pinch-off clamps at each end). These sample tubes are prepared and owned by Lamont-Doherty Earth Observatory who maintains a stock of them and ships directly to the project office once the request for sample tubes form is completed and submitted through this web page . (Internal USGS access only)

Both the tritium and helium samples should be collected in duplicate. The duplicate water sample for tritium determination (duplicate 500cc bottle)

should be retained at the Project Office, but both copper tubes should be returned for each sample. The project should request the appropriate number of copper sample tubes from this page .

The project will be billed $50 for each copper sample tube, to be refunded when the samples are submitted for analysis and/or unused sample tubes are returned to the contract laboratory.

The copper tube for He and Ne determinations can normally be flushed and filled within 5 minutes. Remove and discard the plastic caps that cover the ends of the copper tube, taking care not to scratch or bend or otherwise damage the ends of the copper tube. Damage to the ends of the copper tube may prevent proper attachment of the sample tube to the vacuum extraction line for sample preparation at the contract laboratory. The copper tube, which is fixed in an aluminum channel holding the stainless steel pinch-off clamps, is connected to a closed path from the well or pump. The connection to the well or pump can be of almost any material including plastic, rubber, or metal tubing, providing that all connections are airtight and will not come loose when back pressure is applied during closing of the copper tubes. Clear plastic tubing (Tygon) is preferred because one can visually observe whether air bubbles are present in the water line. It is recommended that connections be secured with stainless steel hose clamps, again being careful not to damage the end of the copper tube. The length of the path from the well or pump discharge should not exceed about 5 feet to minimize the possibility of gas separation from the water sample prior to sealing the copper tube.

Any trapped air or formation of gas bubbles in the helium water sample will produce erroneous results. Back pressure is normally applied to the discharge end of the copper tube during flushing. The project office will need to obtain a small valve and suitable compression type fittings to attach the valve to the discharge end of the copper tube. Figures 1 and 2 show diagrams of the copper tube and back-pressure valve assembly, respectively. The symbols for "no bubbles" show areas where clear plastic tubing can be inserted to observe inflow to the copper tube (Figure 1) and discharge from the copper tube (Figure 2) before the back pressure valve to check for bubble formation. Both water flow and back pressure on the sample should be increased if gas bubble formation is observed in either clear plastic tubing. The valve should not be closed completely during filling because a steady flow of water must be maintained through the copper tube during sealing. Suitable parts to make the back pressure valve assembly are:

Whitey valve SS-1RS6, 3/8-inch stainless steel valve

Swagelok 3/8-inch Nylon ferrules set, NY-600 sets (10 each)

These items are available through the Swagelok Companies. Check local listings for suppliers of Swagelok products or equivalent. An over-pressure of approximately1 atmosphere, 14 psi, is normally sufficient to prevent gas bubble formation in the ground-water sample. However, in general, to prevent gas bubble formation, the back-pressure applied must exceed the internal pressure of the dissolved gases in the water sample.

FIGURE 1

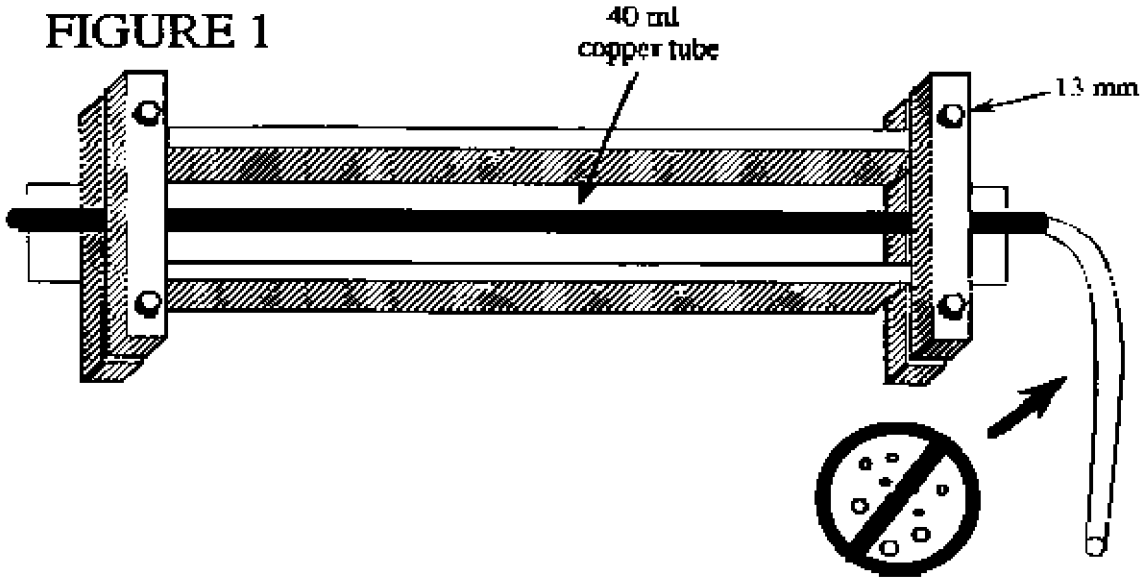

FIGURE 2

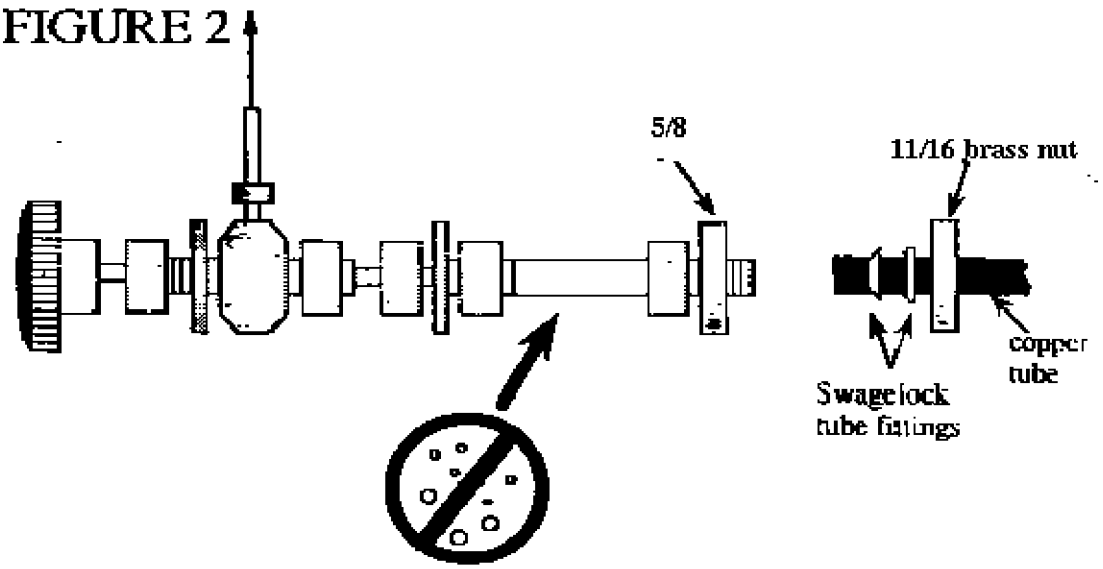

Figure 3 (A-D) shows photographs of the equipment used to take the noble gas and tritium sample. Figure 3A shows the copper tube in an aluminum channel with stainless steel pinch-off clamps, a 1/4-inch copper tube used to connect to the pump, and back-pressure value. Figure 3B shows the parts of Figure 3A connected for sampling and a 500cc safety coated glass bottle with polycone seal for collection of a tritium sample. Note that in this case, clear plastic tubing was not inserted at the inflow and outflow ends of the copper tube and thus, in this case, there is no opportunity to check if gas bubbles are forming inside the tubing. Figure 3C shows the back-pressure valve connected to the end of the copper tube. Figure 3D shows the ends of properly sealed copper tubes (note the centering of the tubes in the pinch-off clamps).

A socket wrench with 13-mm (note metric bolt) socket is used to turn the bolts that close the pinch-off clamps. Prior to turning the bolts, the entire line from the well through the copper tube should be tapped forcibly to dislodge any gas bubbles that may be in the line or copper tube. During the tapping process, the copper tube should be held at an approximate 45-degree angle with discharge pointing up, to assure that gas bubbles, if present, will be completely flushed. This tapping procedure normally requires about 1 minute to complete. Once satisfied that water flowing

through the copper tube is free of any gas bubbles, the socket wrench is used to close the bolts on the pinch-off clamps, beginning with the bolts at the discharge end. Before turning the bolts, be sure to position the copper tube in the approximate center of the pinch-off clamp. There are two bolts on each clamp. Turn the bolts in successive order (back and forth approximately four (4) times until firmly closed) so that the blades of the pinch-off clamp close approximately evenly. The pinch-off clamps are machined to leave about a 1-mm space when the bolts are turned all the way down; however, care should be taken not to over tighten and strip the threads on the bolts. After tightening the discharge end bolts, tighten the upstream bolts in the same manner, again centering the copper tube between the blade. When done, double check to be sure that all bolts are tight. The sample is then complete and the copper tube can be disconnected from the well or pump.

Remove the back-pressure valve from the discharge end of the copper tube. Precautions should be taken not to scratch or otherwise damage the ends of the copper tubes. If waters are corrosive, such as seawater or other saline or acidic waters, the ends of the copper tubes should be washed with dilute water to prevent corrosion, which might prevent obtaining a proper seal when extracting the noble gases. Care should be taken not to further bend the ends of the sealed copper tubes because they can easily break off. If the tubes were received with plastic caps protecting the ends, do not replace the caps after filling. Additional instructions on ground-water sampling for noble gases provided by Lamont-Doherty Earth Observatory appear at the end of this document.

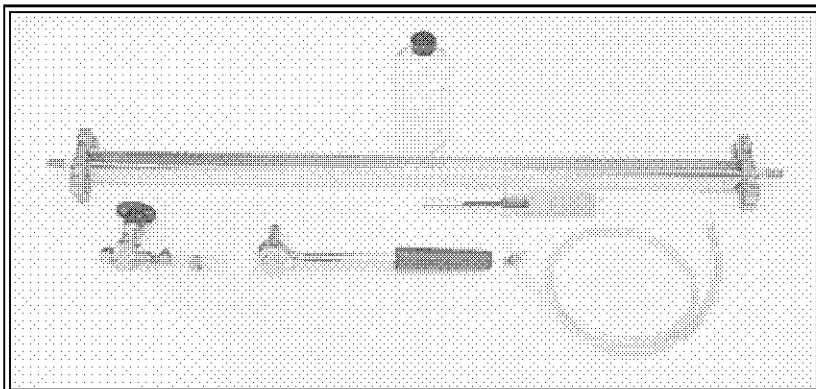	Figure 3a. Copper Tube in Aluminum Channel
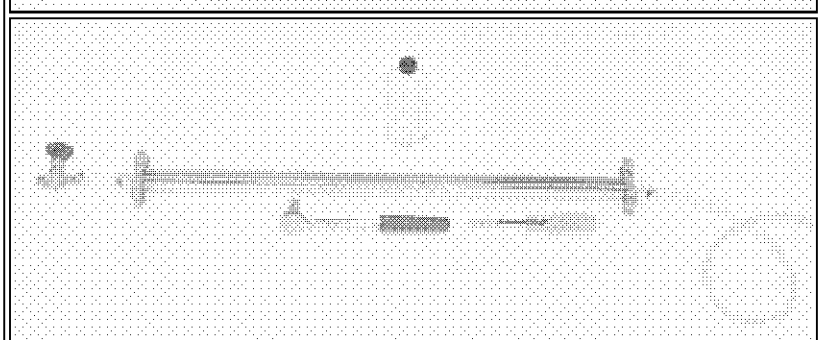	Figure 3b. Parts Connected for Sampling
	Figure 3c. Back-Pressure

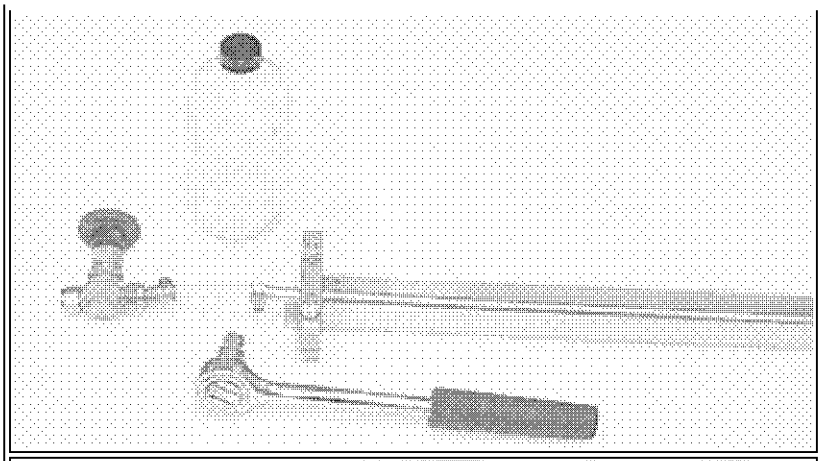

Valve Connected

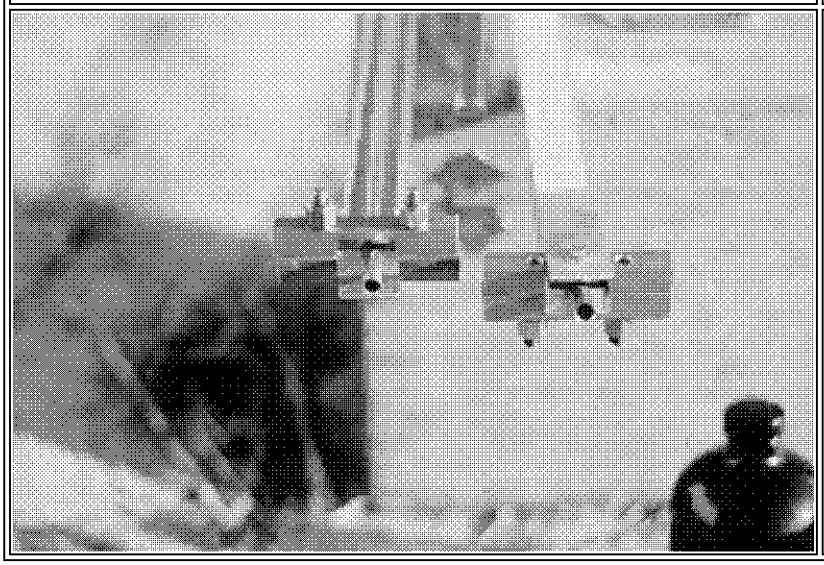

Figure 3d. Properly Sealed Copper Tubes and tritium bottles

USGS personnel will be responsible for proper collection of water samples, including (1) care in avoiding possible damage to ends of sample tubes which might preclude proper connection to laboratory high-vacuum extraction lines, and (2) exclusion of gas bubbles during sample collection. The contract lab will report samples that could not be extracted or analyzed because of improperly sealed sample containers and/or damaged sample containers. Improperly collected samples, such as samples containing gas bubbles, are usually not detected until the analysis of noble gases is made. Therefore, in most cases, the Project Office will be charged the full price of analysis for improperly collected samples, even though no age can be determined.

SUBMITTAL OF SAMPLES TO THE CONTRACT LABORATORY

When the samples have been collected and are ready to be analyzed, the project office must download and complete the Sample Submission Form (an Excel spreadsheet) from . The completed submittal spreadsheet is returned by e-mail attachment to **jwayland@usgs.gov** with a cc to **cfc@usgs.gov**. Sample ID tracking numbers will be assigned by the Reston Chlorofluorocarbon Laboratory and retuned to the project office via e-mail, and/or as stick on labels. It is the responsibility of the project office to properly identify each sample with the sample ID tracking number. The project office then ships the samples to Lamont-Doherty Earth Observatory and notifies the Reston Chlorofluorocarbon Laboratory (via e-mail to **jwayland@usgs.gov** with cc to **cfc@usgs.gov**) of date of shipment. Lamont-Doherty Earth Observatory will notify the Reston Chlorofluorocarbon Laboratory when samples are received and condition of samples upon receipt. The project office will be notified of

any samples damaged in shipment. Note: NWQL ASR forms are no longer used to request analytical services for $^3H/^3He$ dating (use submittal spreadsheet as described above).

SENDING THE SAMPLES TO THE CONTRACT LABORATORY

Ship the sample tube(s) and water samples for tritium determination to

Dr. Peter Schlosser
Lamont-Doherty Earth Observatory
Geochemistry Bldg, RM 74
Route 9W
Palisades, NY 10964

Precautions need to be taken to assure that samples shipped in winter months do not freeze during shipping.

ABOUT PRICES

All prices will remain the same as previously charged through the NWQL during FY01. Billing by SV will be processed through the Branch of Regional Research, ER (contact: Sharla R. Pierce, AO; **srpierce@usgs.gov**). The price in FY01 remains $875.00 (Schedule 1033 and labcode 2112). A deposit of $50.00 per sample tube is collected via SV when sample tubes are requested, and refunded when samples are shipped to Lamont-Doherty Earth Observatory, including refund for returned unused sample tubes. Samples will NOT come through NWQL and costs will NOT be charged by the NWQL.

REPORTING OF RESULTS

Results will be reported to the project office as they are received from the contract laboratory (Noble Gas Laboratory of Lamont-Doherty Earth Observatory). Normally the contract laboratory issues two reports. The first, with yellow cover, is issued when a sufficient number of analyses have been made to permit preliminary interpretation of age. The Project Office should carefully review these results and follow with questions to the contract laboratory (through Julian Wayland; **jwayland@usgs.gov**). A final report is issued (with blue cover) when all analyses that can be made are complete and interpreted. If further interpretation and/or analyses follow, the contract lab may issue a revised final report (green cover). Each report is mailed to the Project Office from the Reston Chlorofluorocarbon Laboratory, which retains a reference copy.

QUESTIONS

Questions about collection and submittal procedures, or information about sample status should be directed to Julian E. Wayland (**jwayland@usgs.gov**) 703-648-5847. All billing will be handled through Reston and all data will be delivered through Julian E. Wayland. Technical information on sample collection and interpretation of Tritium/Helium-3 age can be found at **http://water.usgs.gov/lab/cfc/**. Technical questions regarding interpretation of Tritium/Helium-3 age can be directed to Niel Plummer (**nplummer@usgs.gov**), 703-648-5841 or Ed Busenberg (**ebusenbe@usgs.gov**), 703-648-5726.

SUPPLEMENTARY SUBMITAL INFORMATION

In addition to the information provided on the submittal spreadsheet, it is suggested that additional information be provided to the Contract Laboratory that will help in sample identification and interpretation of age. The submittal information sent to the Noble Gas Laboratory at Lamont-Doherty Earth Observatory should include a cover letter with the following information (some of this will already be in the submittal spreadsheet):

1. Site I.D.
2. Date and time of collection.
3. Ground-water temperature.
4. Estimated, or known, tritium content.
5. Estimated, or known, elevation of the recharge area for the sample.
6. General description of the hydro-geologic environment, location, and well construction information.
7. Any information regarding possible tritium contamination of the sample.
8. The name, FAX number, e-mail address, and phone number of the Project Chief or person technically responsible for the samples.

SHIPMENT OF SAMPLES

Both copper tubes and one 500cc water sample should be suitably packaged and shipped directly to:

Dr. Peter Schlosser
Lamont-Doherty Earth Observatory
Geochemistry Bldg, RM 74
Route 9W
Palisades,NY 10964

The duplicate 500cc water sample for tritium determination by helium ingrowth is retained at the Project Office until results are received. During cold periods, precautions should be taken to ensure that water samples do not freeze during shipment.

Additional Information from Lamont-Doherty Earth Observatory

L-DEO, July 20, 1994

~~WARNING.- Watch out for gas bubbles in the plastic tubing! Make sure there is no contact of the water with air before you take the sample.

1. SAMPLER PREPARATION

Write the sample location, date, and time, on the aluminum channels with a waterproof marker. Mark the channels before you begin to draw water through the sample container. Whenever possible, take duplicate samples.

Both ends of the aluminum channel have clamps to hold a piece of copper tube. They may rattle loose during shipment. These clamps should be finger-tightened to hold the copper tube firmly on center in the aluminum channel (Figure 1).

For sampling water under high pressure, you need to install a pressure valve on one end of the copper tube. Slide a brass nut over the copper tube as

shown in Figure 2. Next, slide two "Swagelock" nylon fittings on the tube so they rest inside the nut (see Figure 2, watch the orientation!). Screw the pressure valve into the brass nut and tighten by hand. Be careful not to break the plexiglass tube.

Place a piece of inner braided PVC tubing onto one end of the copper tube and fix it with a hose clamp. Make sure that you do not deform the copper tube by tightening the hose clamp. Connect the other end of the tubing to the pump discharge.

2. FLUSHING

Open the pressure valve completely. Hold the copper sampler vertically (pressure valve UP) with one hand and the ratchet wrench with the other hand. Allow the water to run at least 1 minute through the system to flush the sample tube. Keep the pressure in the system as high as possible (it is safe up to 10 bars). Watch the PVC tubing and the plexiglass tube near the valve (Figure 2) for bubbles. Bubbles do preferentially form near fittings. If bubbles are present, squeeze the tube or knock against the tube to get rid of the bubbles. You may also try to increase the pressure further by reducing the flow through the copper tube by partially closing the brass valve. During flushing, bang the side of the aluminum channel with the ratchet handle to remove trapped air bubbles from the copper tube. Watch again the plexiglass tube between the valve and the sample container for bubbles (Figure 2). Close the pressure valve completely. Make sure that the sample container was flushed at least 1 minute with bubble-free water. If you cannot avoid formation of bubbles, take the sample anyway, and mark the sample container accordingly.

3. SEALING

Once flushing is complete and no air bubbles appear in the PVC tubing, the copper tube may be closed off. Close the valve completely. Tighten the clamp which is closer to the pressure valve (top clamp, outflow) first. Tighten each screw a little at a time until the outer edges of the clamp touch. You have tightened the clamps sufficiently when you notice that it is getting much harder (almost impossible) to tighten the clamp further. Do not worry, it is not easy to shear the bolts. The clamp will bow somewhat around the copper, so that it maintains a constant pressure on the copper seal. Watch the plastic tubing for bubbles while tightening the top clamp. Tighten the bottom clamp and remove the plastic tubing. If you think there are bubbles inside the copper tube after it has been clamped, write "BUBBLES?" on the aluminum channel. Remove the pressure valve. You can reuse the nylon fittings and the brass nut.

4. SAMPLER STORAGE

Shake the sample container a little to remove the excess water from the ends. If the water is very corrosive (high salt content), rinse the inside of the copper tube ends by spraying low salinity water into them and shaking out the excess.

Sampler should be returned to the box immediately after cleaning and then stored out of the weather. The ends of the copper tube are very fragile after

the tube is squeezed.

POINTS TO REMEMBER

1. Avoid bubbles.
2. Close clamp at outflow end first.
3. Copper tube ends are very fragile after clamp is tight.
4. If you think there are bubbles inside the copper tube after it has been clamped, write "BUBBLES?" on the aluminum channel.
5. Make sure that the sample container is properly marked (date, time, location).
6. Take duplicates whenever possible!

Good Luck!!!

Dr. Peter Schlosser
Lamont-Doherty Earth Observatory
Geochemistry Bldg, RM 74
Route 9W
Palisades, NY 10964

U.S. Department of the Interior
U.S. Geological Survey, Reston, VA, USA
Original Design by Brian C. Norton | 2004 Design by Chad M. Veloso
Web Page Feedback
Last Modified on Friday, August 13, 2004