PASADENA Water&Power

Construction is set to begin on a new groundwater treatment plant being built and funded by NASA in Pasadena. Once completed, Pasadena Water and Power (PWP) will operate the plant to:

- **Remove chemicals that have been present for several years**
- **Restore water quality in part of the aquifer underlying Pasadena & Altadena**
- **Re-open four water production wells with improved infrastructure**

This will enable PWP to resume using these wells for supplying clean drinking water to customers.

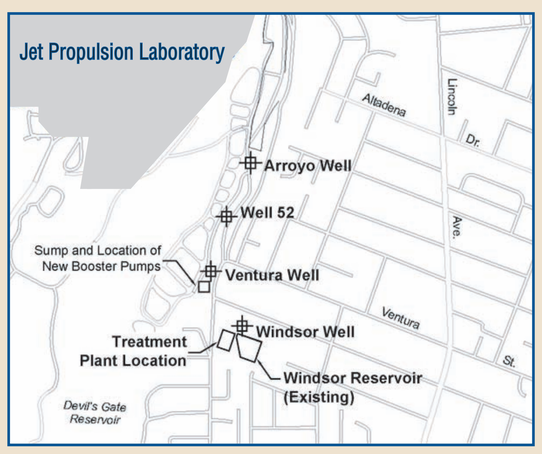

Two Major Components

Extracting Groundwater

from four improved wells routed to the new treatment plant

Wells	Pumping Capacity gallons per minute (gpm)
Arroyo	2,200
Well 52	1,800
Ventura	1,600
Windsor	1,400
TOTAL	7,000 gpm

Operating a New Treatment Plant

on City-owned land next to the Windsor Reservoir at 2696 Windsor Avenue

HOW IT WORKS

Ion Exchange (IX)
To remove perchlorate

- Groundwater runs through four pairs of steel tanks (approximately 12 feet in diameter and 16 feet high).
- Each tank contains 12,000 to 16,000 pounds of plastic beads, called resin, each the size of a grain of sand.
- When dissolved perchlorate touches the resin, the perchlorate attaches to the resin.
- Resin with attached perchlorate is removed on a routine basis for disposal at a licensed off-site facility.
- New resin is placed in the tanks.

Liquid-Phase Granular Activated Carbon (carbon filter)
To remove Volatile Organic Compounds (VOCs)

- Groundwater runs through five pairs of steel tanks (approximately 12 feet in diameter and 23 feet high).
- Each tank contains about 40,000 pounds of charcoal-like carbon particles (3 to 5 times larger than a grain of sand) that attract and accumulate chemicals.
- Carbon with attached chemicals is removed on a routine basis for disposal at a licensed off-site facility.
- New carbon is placed in the tanks.

Disinfection Process

After the carbon filter process, the water will be disinfected. Disinfection prevents the growth of bacteria in water for distribution. The clean water will be stored in the Windsor Reservoir before being distributed to PWP customers.

- The disinfection chemicals will be secured and monitored in a disinfection building.

Process Flow Diagram (Simplified)

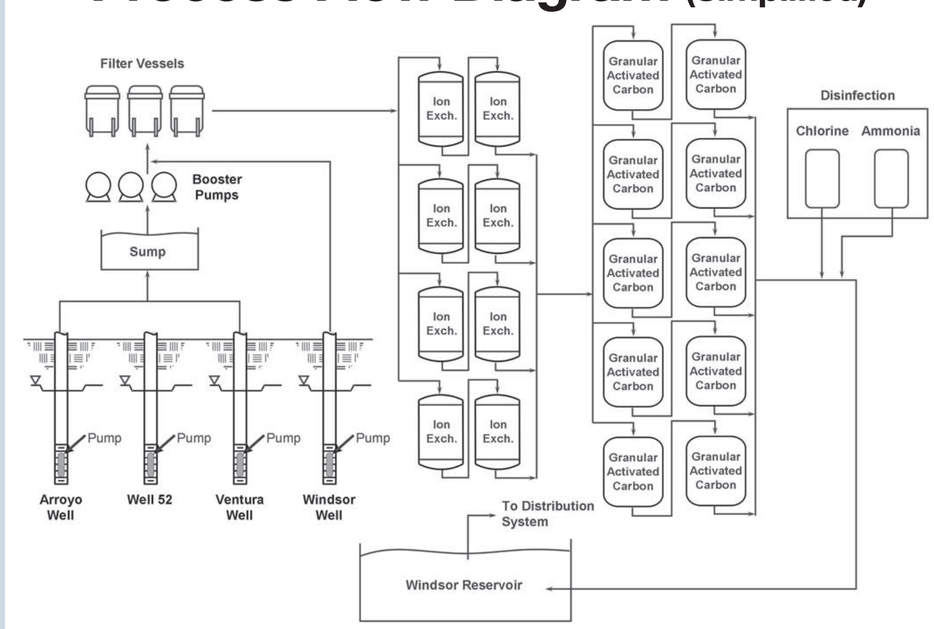

Ion exchange and liquid-phase granular activated carbon systems are two State-approved technologies for treating groundwater and have been proven to work effectively.

PASADENA Water&Power

TREATMENT PLANT

Construction is set to begin on a new groundwater treatment plant in Pasadena at the City-owned Windsor Reservoir including:

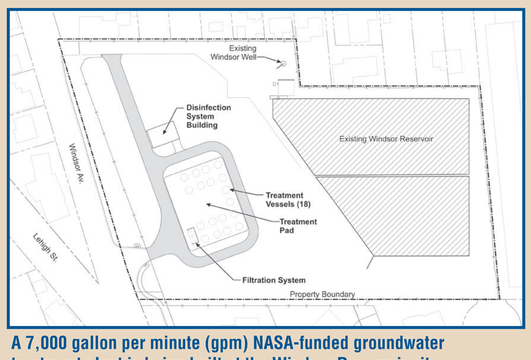

A 7,000 gallon per minute (gpm) NASA-funded groundwater treatment plant is being built at the Windsor Reservoir site.

- Building pads and site grading inside the fence
- Constructing a water disinfection building
- Installing pipelines and making electrical improvements
- Building a concrete pad (steel tanks will be delivered and placed here)
- Upgrading a new turn lane into the south gate

An Environmental Review conducted under the California Environmental Quality Act (CEQA) was part of a Conditional Use Permit (CUP) package approved by the City of Pasadena in July 2008. All prescribed mitigation measures have been incorporated into the treatment plant design, construction and operational requirements.

Construction equipment is operated only during approved hours.

Privacy fencing screens the facility from the street and from nearby residences.

A variety of shrubs were planted along the Windsor Avenue Fence last November.

Minimizing Disturbances During Construction

Efforts to reduce dust, noise and traffic include:

- Watering the area during earthmoving work
- Operating construction equipment only during approved hours
- Having an approved traffic plan

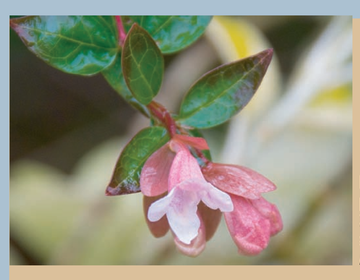

Flowering shrubs planted in the fall 2008 are in bloom along Windsor Avenue.

Attention to Design Details

Efforts to help blend the facility with the surrounding area include:

- Using neutral paint colors on exterior surfaces
- Site grading on the north end to lower the facility as viewed from the street
- Upgrading south entrance to the plant and a pedestrian sidewalk
- Landscaping with a variety of plants

ANTICIPATED SCHEDULE

Construction at the Windsor Reservoir site Spring 2009 ► lasting roughly 12 months

PASADENA Water&Power

WELLS

As the new groundwater treatment plant is being built next to the Windsor Reservoir, construction activities also will be taking place at four closed municipal water production wells.

Aroyo Well

Well 52

When re-opened, four wells will be used to extract groundwater for treatment at the new Monk Hill Treatment Plant at Windsor Reservoir.

Ventura Well

Windsor Well

Construction at the Wells

Re-opening these wells requires upgrading their infrastructure:

- Installing pipes and new electrical components
- Installing new high-efficiency booster pumps near Ventura Well

New booster pumps are needed to push the extracted groundwater through the entire treatment system and on to the Windsor Reservoir.

Wells Rehabilitation

This process takes place once construction at the wells is complete. Rehabilitation includes well cleaning and relining where necessary, followed by performance testing.

Performance Testing

- conducting pump tests
- treating the extracted groundwater at the new plant and
- discharging the clean water to the Arroyo spreading basins in compliance with Regional Water Quality Control Board surface water discharge requirements.

Start Up Testing

Testing the entire system ensures it operates as it should and that groundwater is cleaned to appropriate state and federal drinking water standards.

Full Operation

PWP is required to obtain a permit from the State Department of Public Health prior to distributing the clean water to customers.

ANTICIPATED SCHEDULE

Construction at the wells	Spring 2009 ► lasting roughly 4 months
Wells rehabilitation	Fall 2009 to Summer 2010
Start up testing	Summer 2010
Full operation	Fall 2010

PASADENA Water&Power

PWP and NASA signed the Monk Hill Agreement in January 2006, which outlined how we would work together to bring the four closed wells in Northwest Pasadena back online. With the support of the EPA and other agencies, our cooperative effort will enable:

- **Construction to begin on a new treatment plant to remove chemicals and restore groundwater quality in part of the aquifer underlying Altadena and Pasadena.**
- **PWP to reopen and resume using four municipal wells for supplying clean drinking water to customers.**
- **NASA to fully execute a three-plant treatment strategy as part of an overall Groundwater Cleanup Program at JPL. These locations include:**
  - The source area on site at JPL since 2005
  - Two wells at the Lincoln Avenue Water Company (LAWC) in Altadena since 2004
  - Monk Hill Groundwater Treatment Plant expected 2010

A Community Effort

Community involvement was an important part of the decision-making proccess.

Throughout 2007 and 2008, we shared information with the community and solicited public input, incorporating much of that input into the facility's design and landscaping plans.

- Community informational gatherings
- Public meetings and documenting public comments
- NASA groundwater cleanup Web site at http://jplwater.nasa.gov
- *Groundwater Cleanup* newsletter and fact sheets available in English and Spanish
- Information repositories for reviewing cleanup documents at local libraries

Public comments received have helped shape the plant's final design, construction and operating requirements.

NASA and PWP have worked together to steer the project through several approval processes:

- An Environmental Review in accordance with the California Environmental Quality Act (CEQA).
- Conditional Use Permit (CUP) prescribed mitigation measures that were incorporated into project requirements.
- City of Pasadena design review and building permit process.

Once construction is complete, PWP will operate the treatment system with continued funding from NASA.

FOR MORE INFORMATION

Construction & Operation
Gary Takara
Pasadena Water & Power
Telephone (626) 744-3729
Email gtakara@cityofpasadena.net

NASA's Groundwater Cleanup Program
Merrilee Fellows
NASA Community Involvement Manager
Telephone (818) 393-0754
Email mfellows@nasa.gov